HUAWEI ME906 Series LTE M.2 Module

Hardware Guide

Issue 05

Date 2013-12-28

Huawei Technologies Co., Ltd. provides customers with comprehensive technical support and service. For any assistance, please contact our local office or company headquarters.

Huawei Technologies Co., Ltd.

Huawei Industrial Base, Bantian, Longgang, Shenzhen 518129, People's Republic of China
Tel: +86-755-28780808 Global Hotline: +86-755-28560808 Website: www.huawei.com
E-mail: mobile@huawei.com

Please refer color and shape to product. Huawei reserves the right to make changes or improvements to any of the products without prior notice.

Trademarks and Permissions

HUAWEI, HUAWEI, and are trademarks or registered trademarks of Huawei Technologies Co., Ltd..
Other trademarks, product, service and company names mentioned are the property of their respective owners.

Notice

Some features of the product and its accessories described herein rely on the software installed, capacities and settings of local network, and may not be activated or may be limited by local network operators or network service providers, thus the descriptions herein may not exactly match the product or its accessories you purchase.
Huawei Technologies Co., Ltd. reserves the right to change or modify any information or specifications contained in this manual without prior notice or obligation.

NO WARRANTY

THE CONTENTS OF THIS MANUAL ARE PROVIDED "AS IS". EXCEPT AS REQUIRED BY APPLICABLE LAWS, NO WARRANTIES OF ANY KIND, EITHER EXPRESS OR IMPLIED, INCLUDING BUT NOT LIMITED TO, THE IMPLIED WARRANTIES OF MERCHANTABILITY AND FITNESS FOR A PARTICULAR PURPOSE, ARE MADE IN RELATION TO THE ACCURACY, RELIABILITY OR CONTENTS OF THIS MANUAL.
TO THE MAXIMUM EXTENT PERMITTED BY APPLICABLE LAW, IN NO CASE SHALL HUAWEI TECHNOLOGIES CO., LTD. BE LIABLE FOR ANY SPECIAL, INCIDENTAL, INDIRECT, OR CONSEQUENTIAL DAMAGES, OR LOST PROFITS, BUSINESS, REVENUE, DATA, GOODWILL OR ANTICIPATED SAVINGS.

Import and Export Regulations

Customers shall comply with all applicable export or import laws and regulations and will obtain all necessary governmental permits and licenses in order to export, re-export or import the product mentioned in this manual including the software and technical data therein.

About This Document

Revision History

Document Version	Date	Chapter	Descriptions
01	2013-05-06		Creation
02	2013-08-02	2.2	Updated Operating System in Table 2-1 Features
		3.4.3	Updated three figures in 3.4.3 RESET# Pins
		3.4.5	Added Figure 3-12 Connections of the W_DISABLE# pin
		3.4.6	Added Figure 3-13 Connections of the GPS_DISABLE# pin
		3.4.7	Updated Figure 3-15 Connections of the Wake_On_WWAN# pin
		3.4.8	Updated Figure 3-16 Connections of the BodySAR_N pin
		3.4.9	Updated Figure 3-17 Connections of the SIM_DET pin
		3.10	Updated Table 3-16 List of NC pins
		4.3.2	Updated Test Standards
		4.4.2	Updated Table 4-8 ME906V conducted Tx power (Unit: dBm)
		5.2	Updated Table 5-1 Absolute ratings for the ME906 module
		5.5.2	Updated Table 5-8 Averaged standby DC power consumption
		5.6	Updated Table 5-16 Test conditions and results of the reliability of the ME906 module
		6.2	Updated Figure 6-1 Dimensions of ME906
		8.2	Updated Table 8-1 Product certifications

Document Version	Date	Chapter	Descriptions
		10	Updated Appendix A Circuit of Typical Interface
03	2013-08-22	3.2	Added the description of ANTCTL pins in Table 3-1 Definitions of pins on the M.2 interface
		3.7	Updated Table 3-11 List of ANTCTL pins
		5.5.2	Added Table 5-14 DC power consumption (GPS)
		5.6	Updated Table 5-15 Test conditions and results of the reliability of the ME906 module
04	2013-10-21	5.6	Updated Table 5-15 Test conditions and results of the reliability of the ME906 module
05	2013-12-28	5.5	Updated Table 5-7 Averaged power off DC power consumption of ME906, Updated Table 5-8 Averaged standby DC power consumption of ME906 (WCDMA/HSDPA/LTE/CDMA/EVDO/GSM) Updated Table 5-9 Averaged Data Transmission DC power consumption of ME906V (WCDMA/HSDPA/LTE/CDMA/ EVDO) Updated Table 5-14 Averaged GPS operation DC power consumption of ME906
		5.7	Updated 5.7 EMC and ESD Features

Scope

ME906V

ME906E

ME906J

Contents

1 Introduction

This document describes the hardware application interfaces and air interfaces that are provided when HUAWEI ME906 series LTE M.2 Module (ME906V, ME906E and ME906J) is used.

M.2 is the new name for NGFF (Next Generation Form Factor), which is the specification of PCI-SIG (Peripheral Component Interconnect Special Interest Group).

This document helps you to understand the interface specifications, electrical features and related product information of the ME906 module.

Table 1-1 ME906 series product name

Product name	Description
ME906V	LTE M.2 Module for North America.
ME906E	LTE M.2 Module for Europe.
ME906J	LTE M.2 Module for Japan.

2 Overall Description

2.1 About This Chapter

This chapter gives a general description of the ME906 module and provides:

- Function Overview
- Circuit Block Diagram

2.2 Function Overview

Table 2-1 Features

Feature	Description
Physical Features	Dimensions (L × W × H): 42 mm × 30 mm × 2.3 mm Weight: about 6 g
Operating Bands (**ME906V**)	LTE: FDD Band 1,2,4,5,8,13,17, all bands with diversity WCDMA/HSDPA/HSUPA/HSPA+: Band 1,2,4,5,8, all bands with diversity CDMA 1X/CDMA EVDO Rev.A: BC0,BC1, all bands with diversity GSM/GPRS/EDGE: 850/900/1800/1900 MHz GPS(L1): 1575.42 MHz GLONASS: 1602 MHz
Operating Bands (**ME906E**)	LTE: FDD Band 1,2,3,5,7,8,20, all bands with diversity WCDMA/HSDPA/HSUPA/HSPA+: Band 1,2,5,8, all bands with diversity GSM/GPRS/EDGE: 850/900/1800/1900 MHz GPS(L1): 1575.42 MHz GLONASS: 1602 MHz

Feature	Description
Operating Bands (**ME906J**)	LTE: FDD Band 1,11,18,19,21, all bands with diversity CDMA 1X/CDMA EVDO Rev.B: BC0,BC6, all bands with diversity WCDMA/HSDPA/HSUPA/HSPA+: Band 1,5,6,19, all bands with diversity GPS(L1): 1575.42 MHz GLONASS: 1602 MHz
Operating Temperature	Normal operating temperature: –10°C to +55°C Extended operating temperature[1]: –20°C to +70°C
Storage Temperature	–40°C to +85°C
Power Voltage	3.135 V to 4.4 V (3.3 V is typical)
Application Interface (75-pin Gold Finger)	USIM (3.0 V or 1.8 V)
	SIM_DET pin (USIM Hot Swap Detection)
	USB 2.0 (High-Speed)
	Power_On_Off pin
	RESET# pin
	LED# pin
	W_DISABLE# pin
	GPS_DISABLE# pin
	Tunable Antenna control (4 GPIOs)
	Wake_On_WWAN# pin
	BodySAR_N pin
	Power supply (5 pins)
Antenna Connectors	MAIN and AUX (supports Diversity and GPS simultaneously) MM4829-2702RA4 by MURATA or other equivalent parts
SMS	Supports MO and MT Supports formats of PDU Point-to-point and cell broadcast
Data Services (**ME906V**)	GPRS: DL 85.6 kbps/UL 85.6 kbps
	EDGE: DL 236.8 kbps/UL 236.8 kbps
	WCDMA CS: DL 64 kbps/UL 64 kbps
	WCDMA PS: DL 384 kbps/UL 384 kbps
	HSPA+: DL 21.6 Mbps/UL 5.76 Mbps

Feature	Description
	DC-HSPA+: DL 42 Mbps/UL 5.76 Mbps
	CDMA 1x: DL 153.6 kbps/UL 153.6 kbps
	EVDO Rev.A: DL 3.1 Mbps/UL 1.8 Mbps
	LTE FDD: DL 100 Mbps/UL 50 Mbps @20M BW cat3
Data Services (**ME906E**)	GPRS: DL 85.6 kbps/UL 85.6 kbps
	EDGE: DL 236.8 kbps/UL 236.8 kbps
	WCDMA CS: DL 64 kbps/UL 64 kbps
	WCDMA PS: DL 384 kbps/UL 384 kbps
	HSPA+: DL 21.6 Mbps/UL 5.76 Mbps
	DC-HSPA+: DL 42 Mbps/UL 5.76 Mbps
	LTE FDD: DL 100 Mbps/UL 50 Mbps @20M BW cat3
Data Services (**ME906J**)	WCDMA PS: DL 384 kbps/UL 384 kbps
	HSPA+: DL 21.6 Mbps/UL 5.76 Mbps
	DC-HSPA+: DL 42 Mbps/UL 5.76 Mbps
	CDMA 1x: DL 153.6 kbps/UL 153.6 kbps
	EVDO Rev.A: DL 3.1 Mbps/UL 1.8 Mbps
	EVDO Rev.B: DL 14.7 Mbps/UL 5.4 Mbps
	LTE: DL 100 Mbps/UL 50 Mbps @20M BW cat3
Operating System	Windows 7/8/8.1/Android 4.0 or later/Chrome OS

[1]: When the ME906 module works at –20°C to –10°C and +55°C to +70°C, **NOT** all its RF specifications comply with the 3GPP and 3GPP2 (CDMA) RF specifications.

2.3 Circuit Block Diagram

Figure 2-1 shows the circuit block diagram of the ME906 module. The application block diagram and major functional units of the ME906 module contain the following parts:

- Baseband controller
- Power manager
- Multi-chip package (MCP) memory
- Radio Frequency (RF) transceiver
- RF Front End

Figure 2-1 Circuit block diagram of the ME906 module

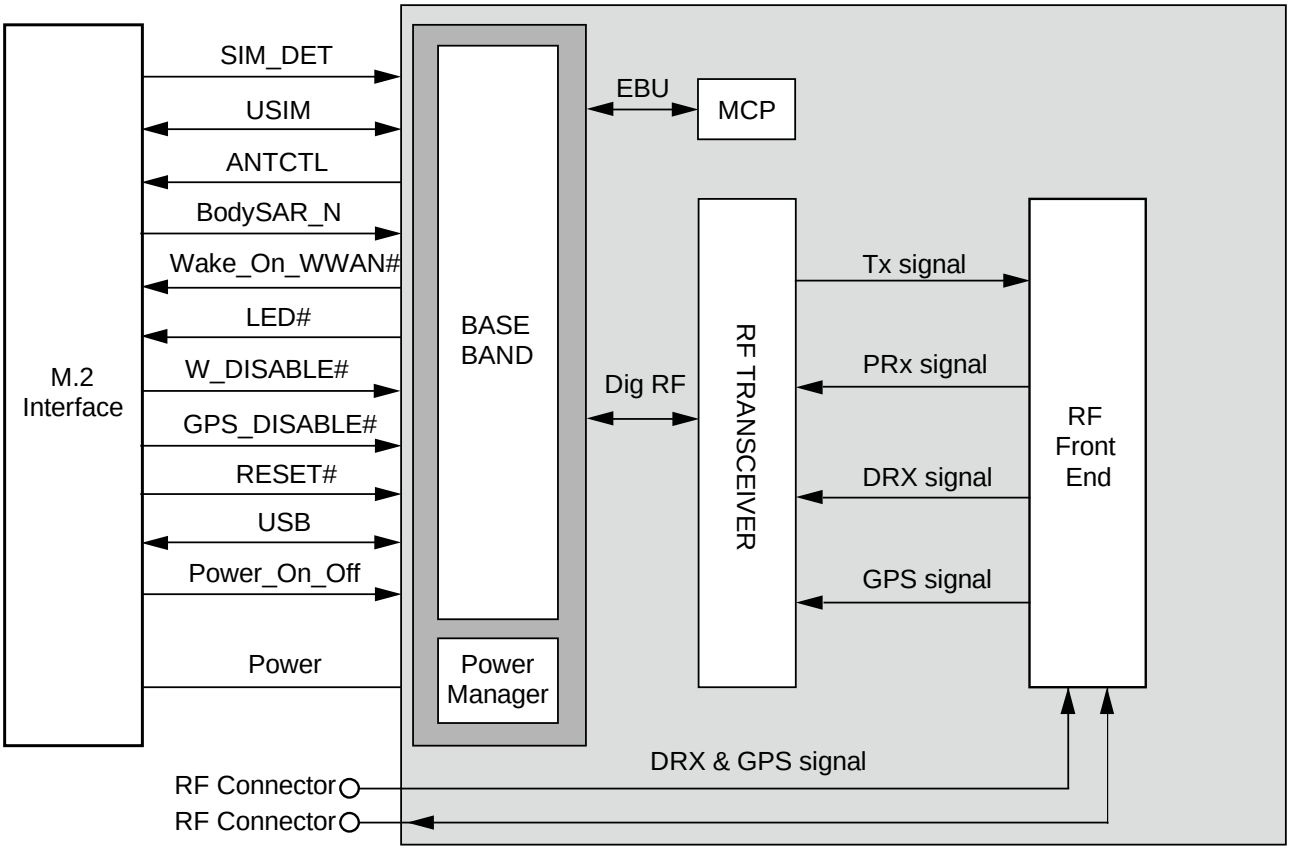

3 Description of the Application Interfaces

3.1 About This Chapter

This chapter mainly describes the application interfaces of the ME906 module, including:

- 75-pin Gold Finger
- Power Interface
- Signal Control Interface
- USB Interface
- USIM Card Interface
- Tunable Antenna Control
- Config Pins
- RF Antenna Interface

3.2 75-pin Gold Finger

The ME906 module uses a 75-pin Gold Finger as its external interface. For details about the module dimensions, see "6.2 Dimensions of ME906".

Figure 3-1 shows the sequence of pins on the 75-pin signal interface of the ME906 module.

Figure 3-1 TOP view of Gold Finger interface pins

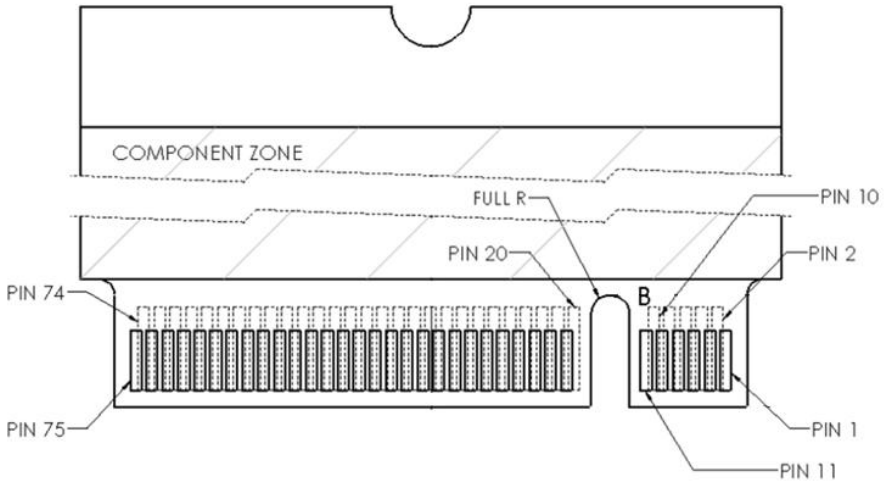

Table 3-1 shows the definitions of the 75-pin interface (67 for signals and 8 for notch) of the ME906 module.

As M.2 Nomenclature, ME906 is Type 3042-S3-B (30 mm × 42 mm, Max. Component Height on Top is 1.5 mm and single-sided, Key ID is B).

Module Nomenclature

Type XX XX - XX - X - X*

Width (mm)
12
16
22
30

Length (mm)
16
26
30
38
42
60
80
110

	Component Max Ht(mm)	
	T Max**	B Max**
S1	1.2	0τ
S2	1.35	0τ
S3	1.5	0τ
D1	1.2	1.35
D2	1.35	1.35
D3	1.5	1.35
D4	1.5	0.7
D5	1.5	1.5

Key ID	Pin	Interface
A	8-15	PCIe x2 / USB / I2C / DP x4
B	12-19	PCIe x2 / SATA / USB / PCM / IUM / SSIC / UART-I2C
C	16-23	Reserved for Future Use
D	20-27	Reserved for Future Use
E	24-31	PCIe / USB / I2C-ME / SDIO / UART / PCM
F	28-35	Future Memory Interface (FMI)
G	39-46	Generic (Not used for M.2)^
H	43-50	Reserved for Future Use
J	47-54	Reserved for Future Use
K	51-58	Reserved for Future Use
L	55-62	Reserved for Future Use
M	59-66	PCIe x4 / SATA

* Use ONLY when a double slot is being specified
** Label included in height dimension
^ Key G is designed for Non-M.2 compliant devices. Intended for custom use. Use at your own risk!
τ Insulating label allowed on connector-based designs

Table 3-1 Definitions of pins on the M.2 interface

Pin No.	Pin Name	I/O	Description	DC Characteristics (V)		
	Normal			Min.	Typ.	Max.
1	CONFIG_3	O	Connected to Ground internally. ME906 is configured as WWAN-SSIC 0.	-	0	-
2	3.3V	PI	Power supply	3.135	3.3	4.4
3	Ground	PI	Ground	-	0	-
4	3.3V	PI	Power supply	3.135	3.3	4.4
5	Ground	PI	Ground	-	0	-
6	Power_On_Off	I	A single control to turn On/Off WWAN. When it is Low, WWAN is powered off. When it is High, WWAN is powered on. It is internally pulled to Low. It is 3.3 V tolerant but can be driven by either 1.8 V or 3.3 V GPIO.	–0.3	1.8/3.3	3.6
7	USB_D+	IO	USB Data + defined in the USB 2.0 Specification.	-	-	-
8	W_DISABLE#	I	WWAN disable function When it is High, WWAN function is determined by software AT command. Default enabled. When it is Low, WWAN function will be turned off.	–0.3	3.3	3.6
9	USB_D-	IO	USB Data - defined in the USB 2.0 Specification.	-	-	-
10	LED#	O	It is an open drain, active low signal, used to allow the M.2 card to provide status indicators via LED devices that will be provided by the host.	Open Drain and requires a pull-up resistor on the host.		
11	Ground	PI	Ground	-	0	-
12	Notch	-	-	-	-	-
13	Notch	-	-	-	-	-
14	Notch	-	-	-	-	-
15	Notch	-	-	-	-	-
16	Notch	-	-	-	-	-
17	Notch	-	-	-	-	-
18	Notch	-	-	-	-	-

Pin No.	Pin Name	I/O	Description	DC Characteristics (V)		
	Normal			Min.	Typ.	Max.
19	Notch	-	-	-	-	-
20	Reserved	-	Reserved for Future Use, please keep it NC in host side.	–0.3	1.8	2.1
21	CONFIG_0	O	Not Connected internally. ME906 is configured as WWAN-SSIC 0.	-	-	-
22	Reserved	-	Reserved for Future Use, please keep it NC in host side.	–0.3	1.8	2.1
23	Wake_On_WWAN#	O	WWAN to wake up the host. It is open drain and active low.	Open Drain and requires a pull-up resistor on the host.		
24	Reserved	-	Reserved for Future Use, please keep it NC in host side.	–0.3	1.8	2.1
25	BodySAR_N	I	Hardware pin for BodySAR Detection When it is High, No TX power backoff (default). When it is Low, TX power backoff.	–0.3	1.8	3.6
26	GPS_DISABLE#	I	GPS disable function When it is High, GPS function is determined by Software AT command. When it is Low, GPS will be turned off.	–0.3	3.3	3.6
27	Ground	PI	Ground	-	0	-
28	NC	-	Not Connected	-	-	-
29	NC	-	Not Connected	-	-	-
30	UIM_RESET	O	USIM Reset	–0.3	1.8/2.85	1.98 /3.3
31	NC	-	Not Connected	-	-	-
32	UIM_CLK	O	USIM clock	–0.3	1.8/2.85	1.98 /3.3
33	Ground	PI	Ground	-	0	-
34	UIM_DATA	IO	USIM DATA	–0.3	1.8/2.85	1.98 /3.3
35	NC	-	Not Connected	-	-	-
36	UIM_PWR	PO	USIM POWER	–0.3	1.8/2.85	1.98 /3.3
37	NC	-	Not Connected	-	-	-

Pin No.	Pin Name	I/O	Description	DC Characteristics (V)		
	Normal			Min.	Typ.	Max.
38	NC	-	Not Connected	-	-	-
39	Ground	PI	Ground	-	0	-
40	I2C_SCL	IO	I2C clock. This function is under development.	–0.3	1.8	2.1
41	NC	-	Not Connected	-	-	-
42	I2C_SDA	IO	I2C data. This function is under development.	–0.3	1.8	2.1
43	NC	-	Not Connected	-	-	-
44	I2C_IRQ	I	Interrupt signal to wake up the module. This function is under development.	–0.3	1.8	2.1
45	Ground	PI	Ground	-	0	-
46	SYSCLK	O	Module clock output for external GNSS module. This function is under development.	–0.3	1.8	2.1
47	NC	-	Not Connected	-	-	-
48	TX_BLANKING	-	Tx blanking signal for external GNSS module. This function is under development.	–0.3	1.8	2.1
49	NC	-	Not Connected	-	-	-
50	NC	-	Not Connected	-	-	-
51	Ground	PI	Ground	-	0	-
52	NC	-	Not Connected	-	-	-
53	NC	-	Not Connected	-	-	-
54	NC	-	Not Connected	-	-	-
55	NC	-	Not Connected	-	-	-
56	NC	-	Not Connected	-	-	-
57	Ground	PI	Ground	-	0	-
58	NC	-	Not Connected	-	-	-
59	ANTCTL0	O	Tunable antenna control signal, bit 0. It is a push-pull type GPIO.	–0.3	1.8	2.1
60	COEX3	-	For coexistence. This function is under development.	–0.3	1.8	2.1

Pin No.	Pin Name	I/O	Description	DC Characteristics (V)		
	Normal			Min.	Typ.	Max.
61	ANTCTL1	O	Tunable antenna control signal, bit 1. It is a push-pull type GPIO.	–0.3	1.8	2.1
62	COEX2	-	For coexistence. This function is under development.	–0.3	1.8	2.1
63	ANTCTL2	O	Tunable antenna control signal, bit 2. It is a push-pull type GPIO.	–0.3	1.8	2.1
64	COEX1	-	For coexistence. This function is under development.	–0.3	1.8	2.1
65	ANTCTL3	O	Tunable antenna control signal, bit 3. It is a push-pull type GPIO.	–0.3	1.8	2.1
66	SIM_DET	I	SIM hot swap detection pin When SIM is present, SIM_DET is High (pulled up to 1.8V); When SIM is absent, SIM_DET is Low.	–0.3	1.8	2.1
67	RESET#	I	Module reset, active low	–0.3	1.8	3.6
68	NC	-	Not Connected	-	-	-
69	CONFIG_1	O	Connected to Ground internally. ME906 is configured as WWAN-SSIC 0.	-	0	-
70	3.3V	PI	Power supply	3.135	3.3	4.4
71	Ground	PI	Ground	-	0	-
72	3.3V	PI	Power supply	3.135	3.3	4.4
73	Ground	PI	Ground	-	0	-
74	3.3V	PI	Power supply	3.135	3.3	4.4
75	CONFIG_2	O	Connected to Ground internally. ME906 is configured as WWAN-SSIC 0.	-	0	-

NOTE

- **P** indicates power pins; **I** indicates pins for digital signal input; **O** indicates pins for digital signal output.
- The **Reserved** pins are internally connected to the module. Therefore, these pins should not be used, just keep them disconnected, otherwise they may cause problems. Please contact us for more details about this information.

3.3 Power Interface

3.3.1 Overview

The power supply part of the ME906 module contains:

- 3.3V pin for the power supply
- UIM_PWR pin for USIM card power output

Table 3-2 lists the definitions of the pins on the power supply interface.

Table 3-2 Definitions of the pins on the power supply interface

Pin No.	Signal Name	I/O	Description	DC Characteristics (V)		
				Min.	Typ.	Max.
2, 4, 70, 72, 74	3.3V	PI	Power supply for ME906, 3.3 V is recommended	3.135	3.3	4.4
36	UIM_PWR	PO	Power supply for USIM card	–0.3	1.8/ 2.85	1.98 /3.3
3, 5, 11, 27, 33, 39, 45, 51, 57, 71, 73	Ground	PI	Ground	-	0	-

3.3.2 Power Supply 3.3V Interface

The ME906 module power is supplied through the 3.3V pins and the voltage ranges from 3.135 V to 4.4 V (typical value is 3.3 V). The ME906 provides 5 power pins and 11 GND pins. To ensure that the ME906 module works normally, all the pins must be connected. The M.2 connector pin is defined as that should support 500 mA/Pin continuous.

When the ME906 module works at GSM mode, the module transmits at the maximum power, the transient peak current may reach 2.5 A. In this case, the power pin voltage will drop. Make sure that the voltage does not drop below 3.135 V in any case.

The traces of the power supply should be as short and wide as possible. It is recommended that at least one 220 μF capacitance is added onto the 3.3V power rails and as close to the M.2 connector as possible. Customer can reduce the capacitance if it can be guaranteed that the 3.3V pin does not drop below 3.135 V in any case.

Figure 3-2 shows the recommended power circuit of ME906 module.

Figure 3-2 Recommended power circuit of ME906 module

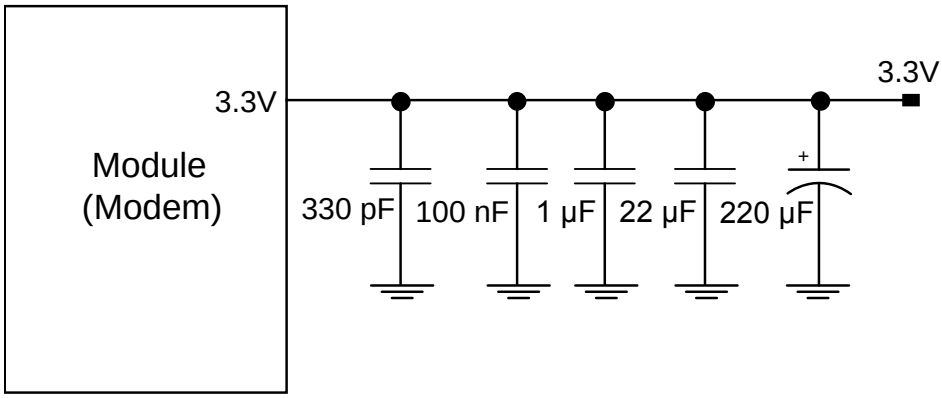

NOTE

3.135 V is the minimum voltage supplied to ME906 by the host, and 3.3V pin must never be under 3.135 V in any case, which is shown as follow:

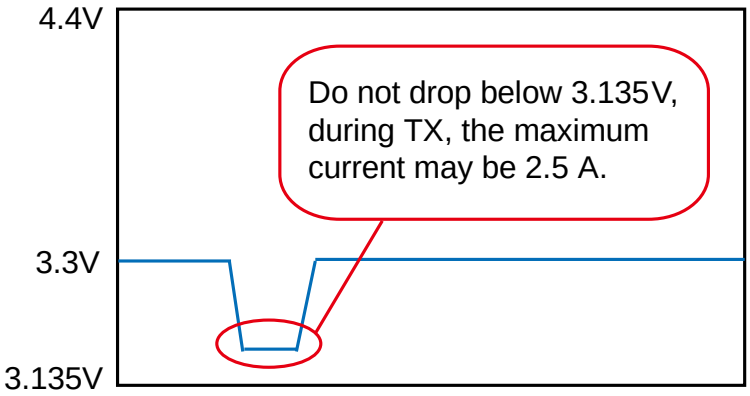

If customer wants to power cycle ME906, the 3.3V pin must stay below 1.8 V for more than 100 ms.

Figure 3-3 shows the power supply timing sequence between power cycling.

Figure 3-3 ME906 power supply timing sequence between power cycling

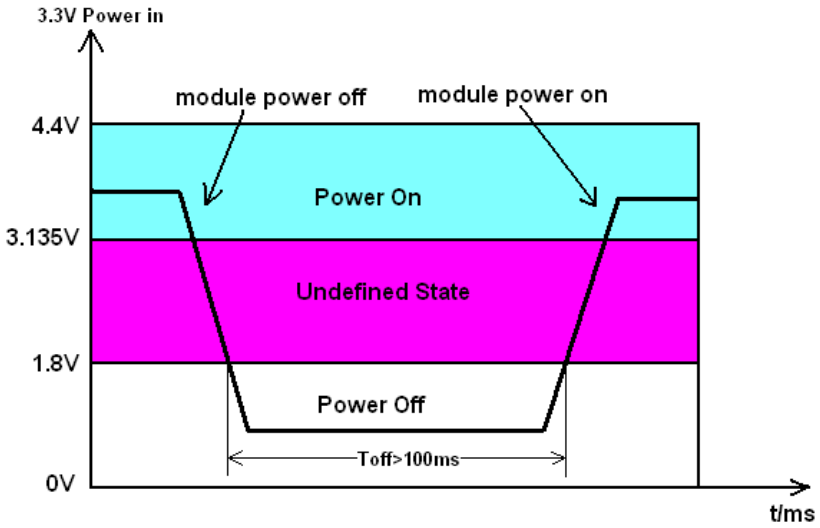

Parameter	Remarks	Time (Min.)	Unit
T_{off}	Power off time	100	ms

3.3.3 USIM Power Output UIM_PWR

Through the UIM_PWR power supply interface, the ME906 module can supply 1.8 V or 2.85 V power to UIM card. The transient current can reach 200 mA, so special attention should be taken on PCB design at the host side.

3.4 Signal Control Interface

3.4.1 Overview

The signal control part of the interface in the ME906 module consists of the following:

- Power On/Off (Power_On_Off) pin
- Module reset (RESET#) pin
- LED control (LED#) pin
- WWAN disable control (W_DISABLE#) pin
- GPS disable control (GPS_DISABLE#) pin
- Wake signal out from module (Wake_On_WWAN#) pin
- BodySAR detection (BodySAR_N) pin
- UIM detection (SIM_DET) pin

Table 3-3 lists the pins on the signal control interface.

Table 3-3 Pins on the signal control interface

Pin No.	Pin Name	I/O	Description	DC Characteristics(V)		
				Min.	Typ.	Max.
6	Power_On_Off	I	A single to turn On/Off WWAN. When it is Low, WWAN is powered off. When it is High, WWAN is powered on. It is internally pulled to Low. It is 3.3 V tolerant but can be driven by either 1.8 V or 3.3 V GPIO.	–0.3	1.8	3.6
67	RESET#	I	Module reset, active low	–0.3	1.8	3.6
10	LED#	O	It is an open drain, active low signal, used to allow the M.2 card to provide status indicators via LED devices that will be provided by the Module.	Open drain and requires a pull-up resistor on the host.		
8	W_DISABLE#	I	WWAN disable function When it is High, WWAN function is determined by software AT command. Default enabled. When it is Low, WWAN function will be turned off.	–0.3	3.3	3.6
26	GPS_DISABLE#	I	GPS disable function When it is High, GPS function is determined by software AT command. Default enabled. When it is Low, GPS will be turned off.	–0.3	3.3	3.6
23	Wake_On_WWAN#	O	It is open drain, WWAN to wake up the host, active LOW.	Open drain and requires a pull-up resistor on the host.		
25	BodySAR_N	I	Hardware pin for BodySAR detection. When it is High, No TX power backoff (default); When it is Low, TX power backoff.	–0.3	1.8	3.6
66	SIM_DET	I	SIM hot swap detection pin When SIM is present, SIM_DET is High (pulled up to 1.8 V); When SIM is absent, SIM_DET is Low.	–0.3	1.8	2.1

3.4.2 Power_On_Off Control Pin

The ME906 module can be controlled to be powered on/off by the Power_On_Off pin.

Table 3-4 Two States of Power_On_Off

Item.	Pin state	Description
1	High	ME906 is powered on. **NOTE: If ME906 needs to be powered on automatically, the Power_On_Off pin must be pulled up to 3.3 V.**
2	Low	ME906 is powered off. **It is internally pulled low with a weak pull-down resistor.**

If ME906 is powered by regulator with 3.3 V

If ME906 is powered by 3.3 V voltage regulator (such as notebook or Ultrabook), Power_On_Off should be pulled up to 3.3 V through a resistor.

The pull-up resistor should be **not greater than 10 kΩ**.

Following is the power on/off sequence:

1. The module gets 3.3 V when supply for the module is switched on.
2. The module is turned on since Power_On_Off is pulled up to 3.3 V by the host.
3. Host cuts off 3.3 V supply to power off the module.

The recommended circuit is shown as in Figure 3-4 .

Figure 3-4 Recommended connections of Power_On_Off pin (auto power)

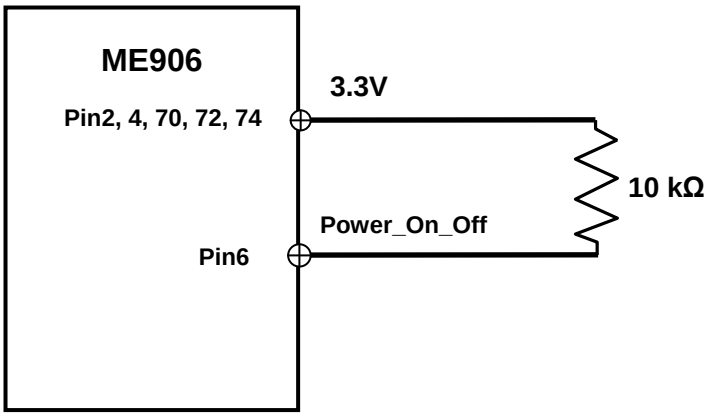

Power on sequence

Do not toggle RESET# during power on sequence. Pulling RESET# low will extend time for module startup.

Recommended power on timing sequence is shown as Figure 3-5 .

Figure 3-5 Recommended power on timing sequence

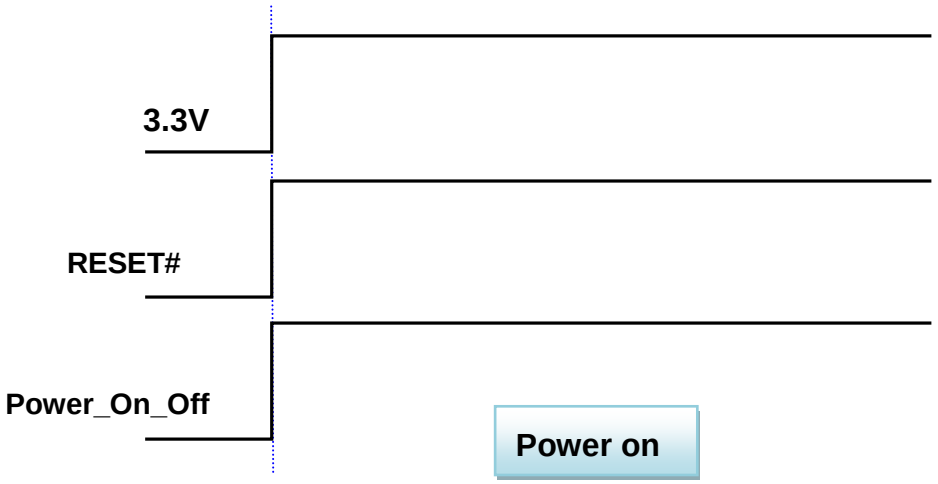

Power off Sequence

Cutting off 3.3 V will power off the module.

Figure 3-6 Recommended power off timing sequence (cut off 3.3 V)

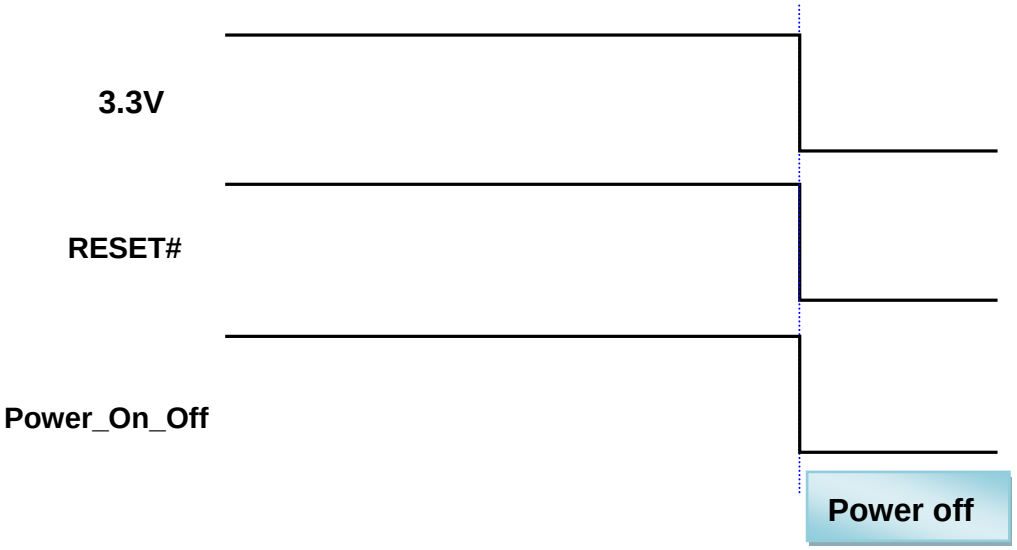

If ME906 is powered directly to battery

For use case ME906 is connected directly to battery, such as tablet platforms, Power_On_Off should be controlled by a GPIO from host to control ME906 to be powered on/off.

It is critical to make sure the module is safely shut off when the tablet SoC is shut off. There will be current leakage if the module is not shut off properly. So it is important to keep Power_On_Off logic low for more than **500 ms** to shut off the module.

The recommended connections are shown as Figure 3-7 .

Figure 3-7 Recommended connections of Power_On_Off pin (control)

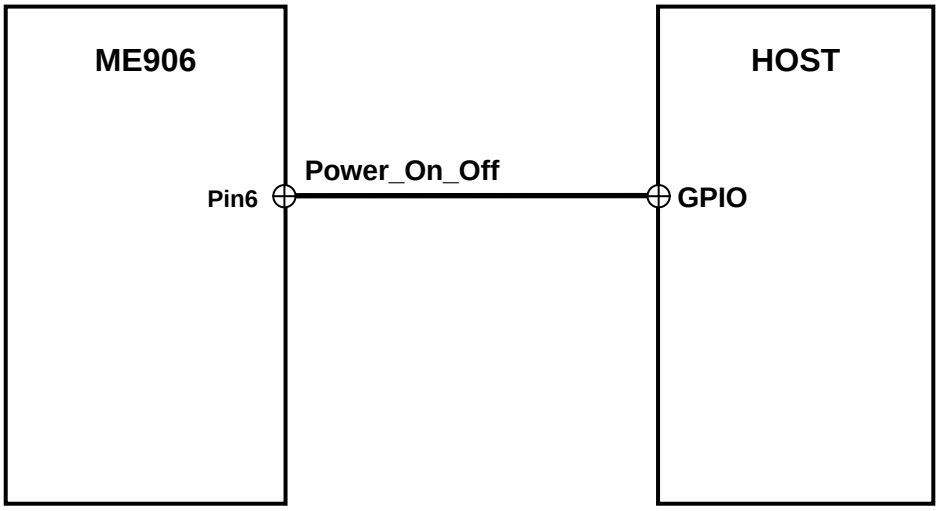

Power on sequence

Do not toggle RESET# during power on sequence, pulling RESET# low will extend time for module startup. The recommended power on timing sequence is shown as Figure 3-8 .

Figure 3-8 Recommended power on timing sequence

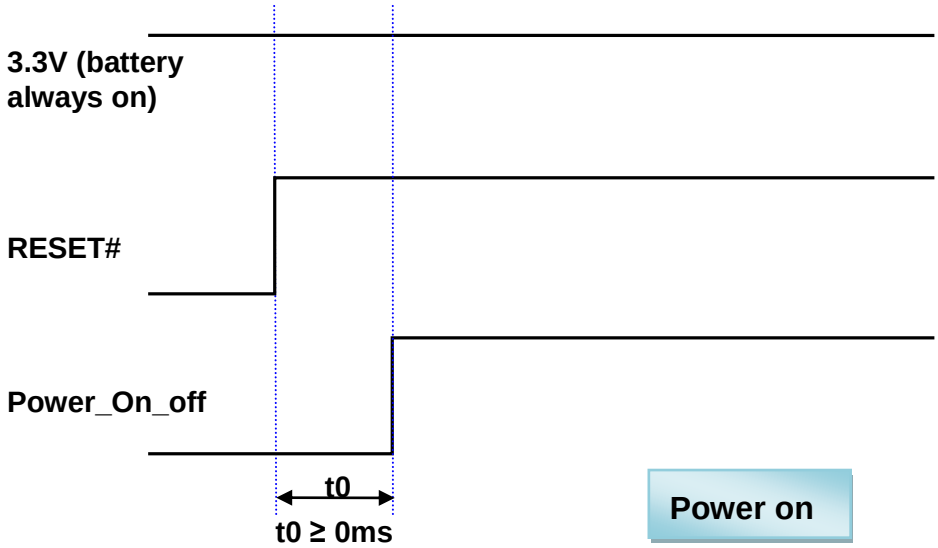

Power off Sequence

Keep Power_On_Off logic low for more than 500 ms to shut off the module.

Figure 3-9 Recommended power off timing sequence (connect to battery)

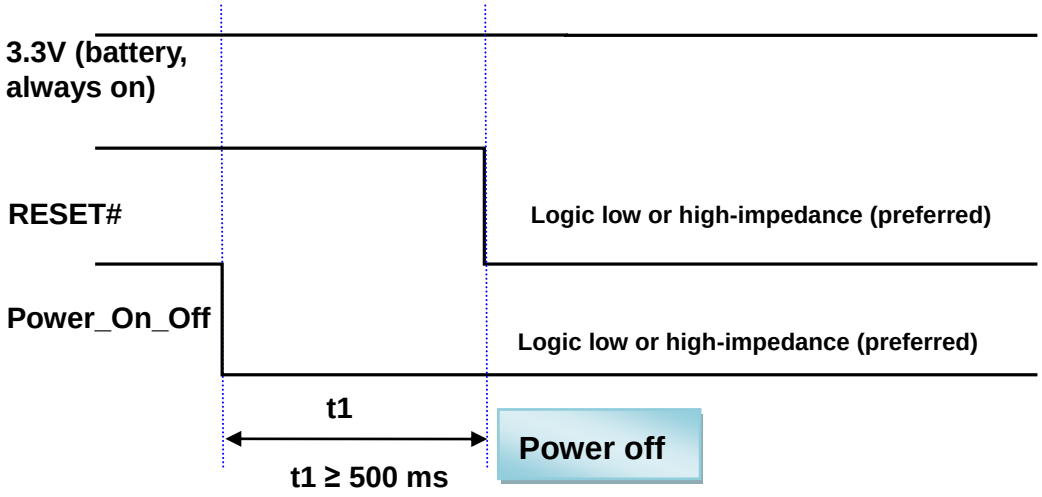

If there is limitation on the controlling GPIO to be programmable 500 ms, the hardware solution as shown in Figure 3-10 can be used.

Figure 3-10 Power on off circuit (hardware solution)

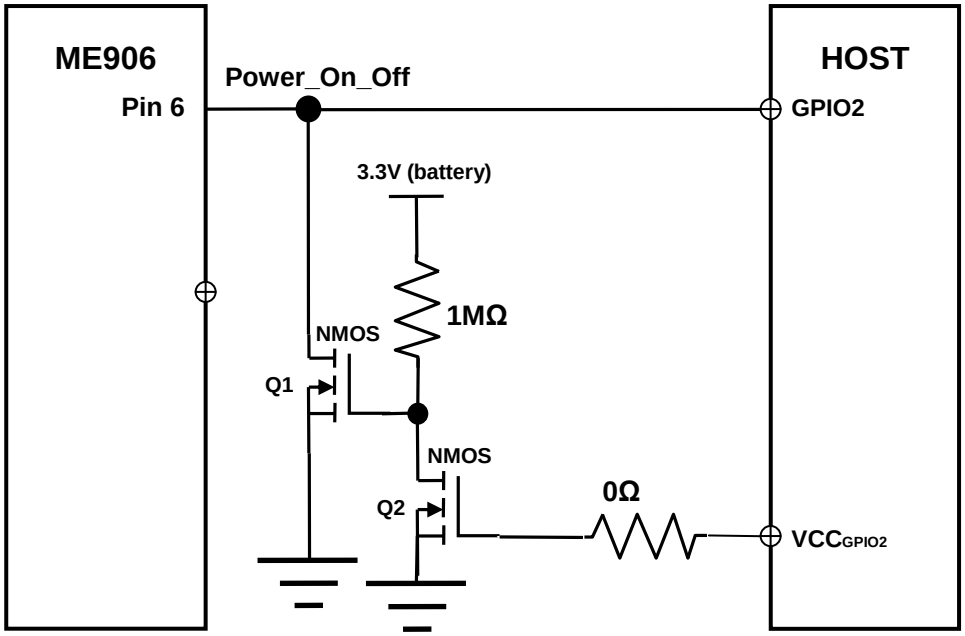

VCC$_{GPIO2}$ is the power domain of the GPIO2.
When **VCC**$_{GPIO2}$ is **ON**, Q2 is on and Q1 is off. So the Pin 6 is controlled by GPIO2 of host.
When **VCC**$_{GPIO2}$ is **Off**, Q2 is off and Q1 is on. So the Pin 6 is pulled low, then the module is powered off.

3.4.3 RESET# Pins

The ME906 module can be reset through the RESET# pin asynchronous, active low. Whenever this pin is active, the module will immediately be placed in a Power On reset condition. Care should be taken for this pin unless there is a critical failure and all other methods of regaining control and/or communication with the WWAN sub-system have failed.

Pulling low RESET# more than **20 ms** and then pulling high will reset the module.

RESET# is optional, which can be not connected. Pulling low Power_On_Off for more than **500 ms and then pulling high** can also work as a reset.

RESET# is internally pulled up to 1.8 V, which is automatically on when 3.3 V is applied even though Power_On_Off is low. Cautions should be taken on circuit design or else there may be back driving issue.

Hardware circuit for RESET# (option 1) GPIO is high-impedance when the host is powered off.

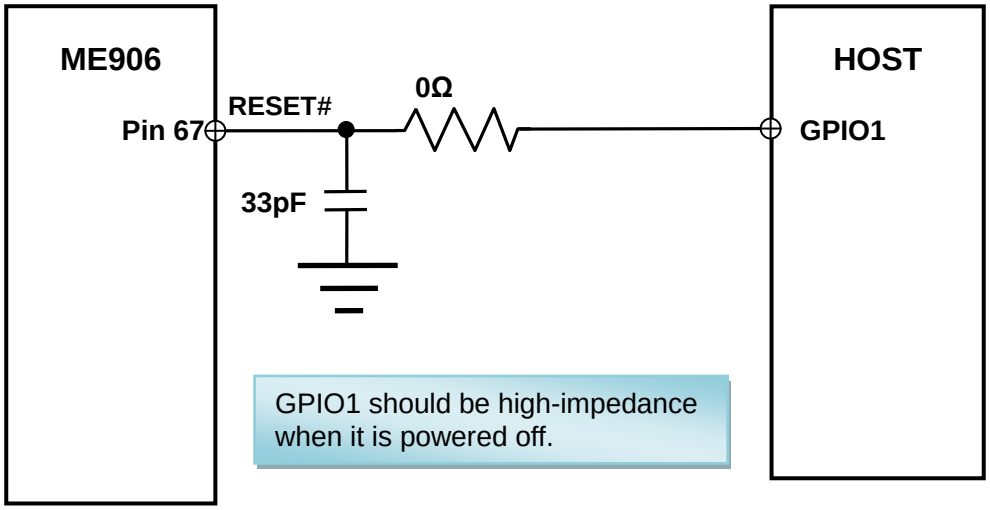

Hardware circuit for RESET# (option 2) GPIO is not high-impedance when the host is powered off.

Use 2 N-MOSFET so that the logic of RESET# and GPIO are the same.

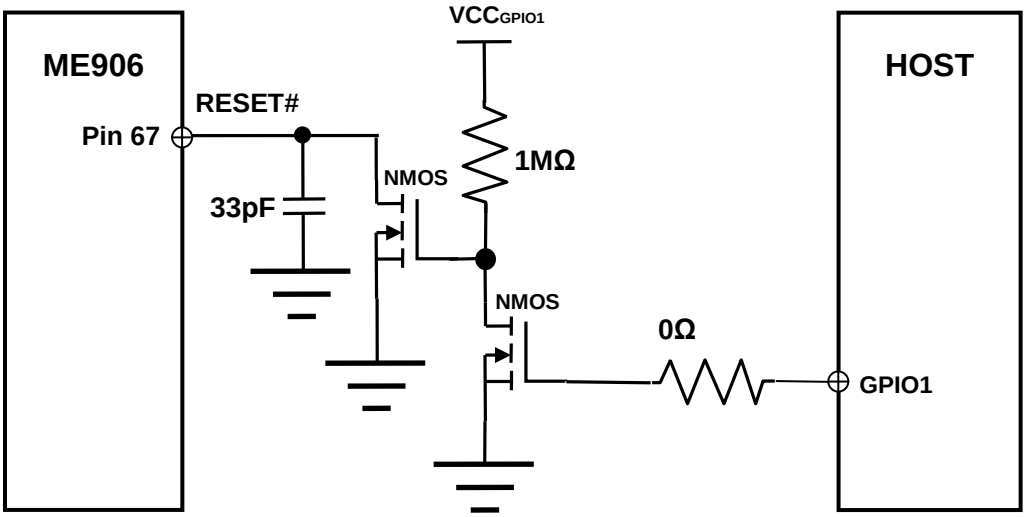

Hardware circuit for RESET# (option 3) GPIO is not high-impedance when the host is powered off.

Use only one N-MOSFET, in this case the logic of RESET# and GPIO1 is reversed.

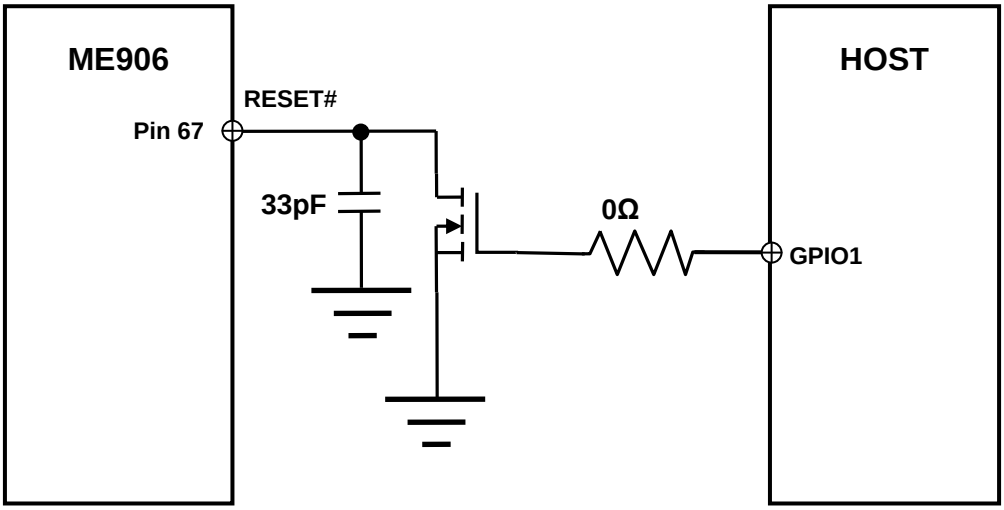

CAUTION

As the RESET# signal is relatively sensitive, it is recommended to install a 33 pF capacitor near to the M.2 pin.

Triggering the RESET# signal will lead to loss of all data in the module. It will also disconnect the module from the network resulting in a call drop.

3.4.4 LED# Pin

ME906 provides an open drain signal to indicate the RF status.

Table 3-5 State of the LED# pin

No.	Operating Status	LED#
1	RF function is turned on	Output Low, current sink
2	RF function is turned off	Output High-Z

Figure 3-11 shows the recommended circuits of the LED# pin. The brightness of LED can be adjusted by adjusting the resistance of the series resistor, and the maximum sink current is 40 mA.

Figure 3-11 Driving circuit

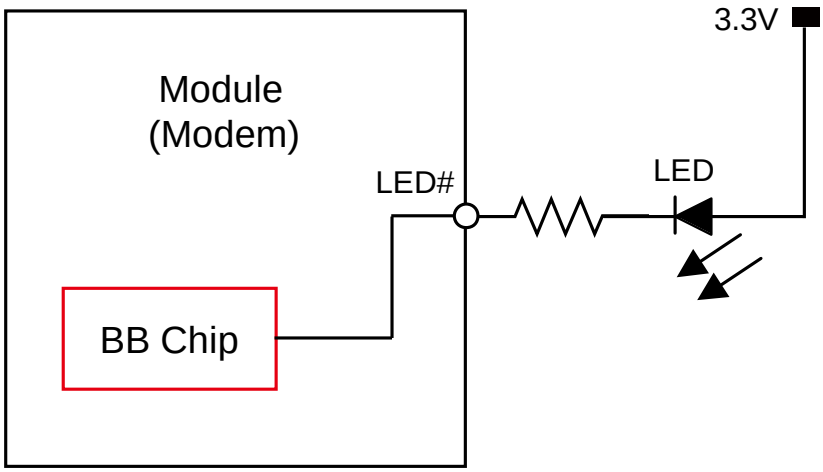

3.4.5 W_DISABLE# Pin

ME906 provides a hardware pin (W_DISABLE#) to disable or enable the radio. In addition, the radio can also be enabled or disabled through software AT commands.

Table 3-6 Function of the W_DISABLE# pin

No.	W_DISABLE#	Function
1	Low	WWAN function will be turned off.
2	High	WWAN function is determined by software AT command. Default enabled.
3	Floating	WWAN function is determined by software AT command. Default enabled.

Figure 3-12 Connections of the W_DISABLE# pin

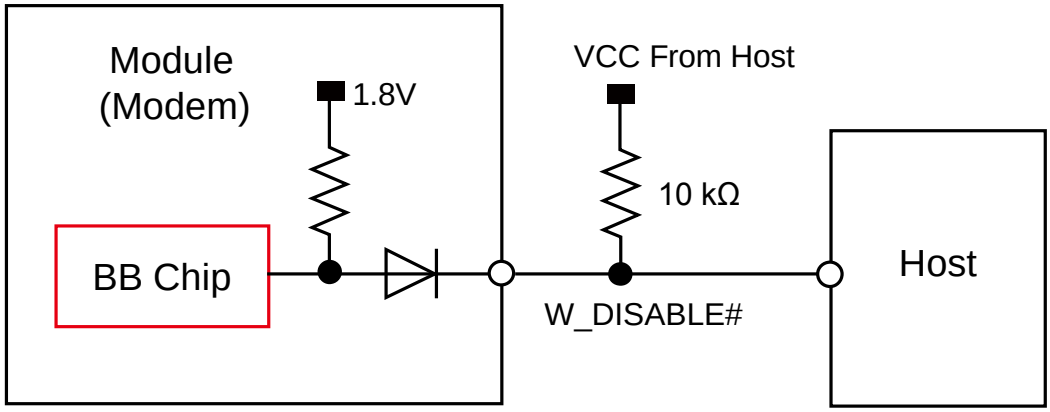

CAUTION

It is recommended not to add a diode on the W_DISABLE# pin outside the ME906 module.

3.4.6 GPS_DISABLE# Pin

ME906 provides a hardware pin (GPS_DISABLE#) to disable or enable the GPS. In addition, the GPS can also be enabled or disabled through software AT commands.

Table 3-7 Function of the GPS_DISABLE# pin

No.	GPS_DISABLE#	Function
1	Low	GPS function is disabled.
2	High	GPS function is determined by software AT command. Default enabled.
3	Floating	GPS function is determined by software AT command. Default enabled.

Figure 3-13 Connections of the GPS_DISABLE# pin

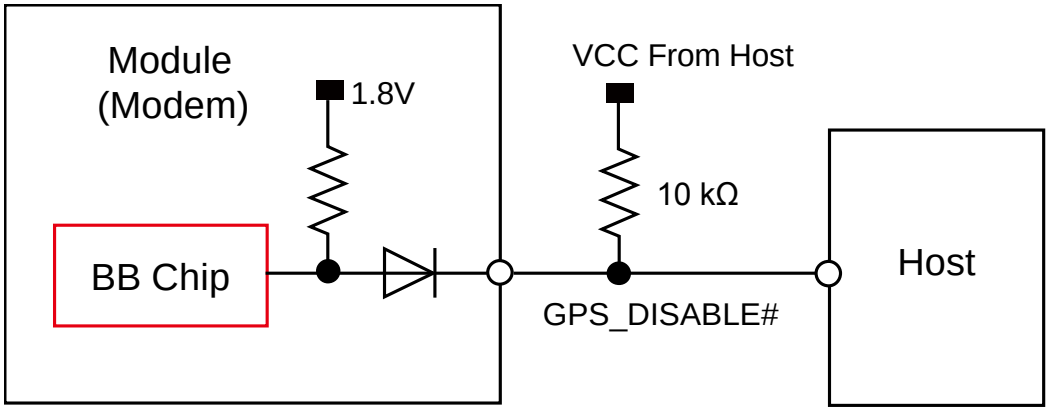

CAUTION

It is recommended not to add a diode on the GPS_DISABLE# pin outside the ME906 module.

3.4.7 Wake_On_WWAN# Pin

ME906 provides an open drain output Wake_On_WWAN# pin to wake host, which is low active.

Figure 3-14 Wave form of the Wake_On_WWAN# pin

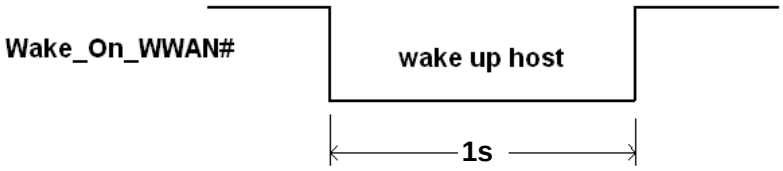

Figure 3-15 Connections of the Wake_On_WWAN# pin

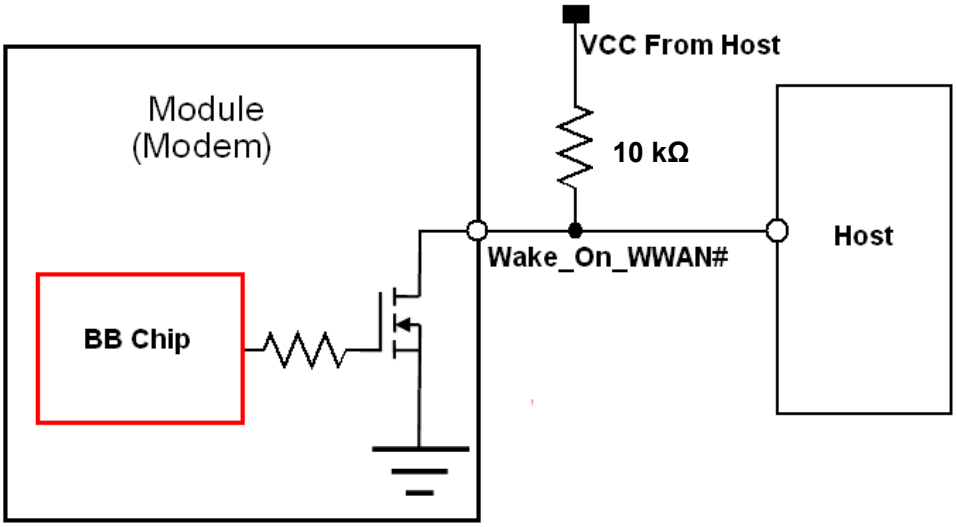

3.4.8 BodySAR_N Pin

ME906 provides an input pin BodySAR_N for BodySAR detection.

Table 3-8 Function of the BodySAR_N pin

No.	BodySAR_N	Function
1	Low	Max. TX power will be backed off by setting through AT command
2	High	Max. TX power will **NOT** be backed off (default)
3	Floating	Max. TX power will **NOT** be backed off

If BodySAR_N pin is used to monitor the proximity sensor output directly, there are some essential preconditions for this hardware solution.

ME906 cannot provide any control signal for the proximity sensor, and any control or programming required by the proximity sensor should be handled by the HOST side.

Figure 3-16 Connections of the BodySAR_N pin

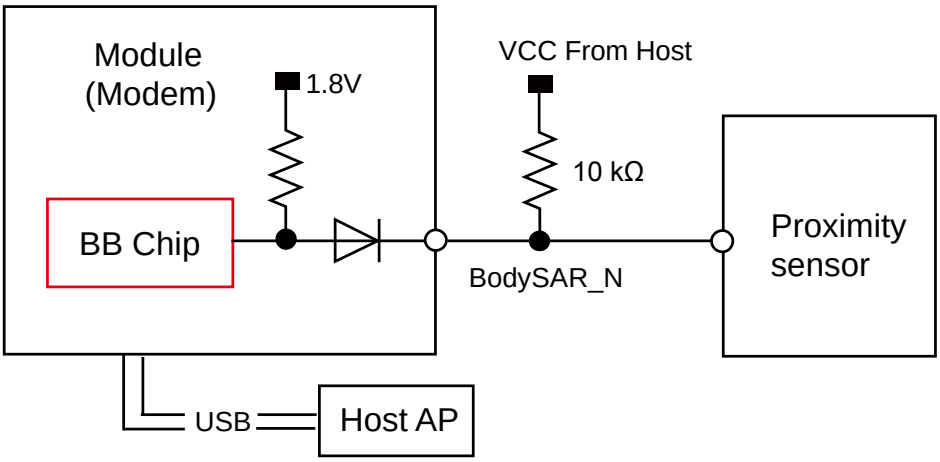

CAUTION

It is recommended not to add a diode on the BodySAR_N pin outside the ME906 module.

3.4.9 SIM_DET Pin

ME906 supports USIM hot swap function.

ME906 provides an input pin (SIM_DET) to detect whether the USIM card is present or not. This pin is a level trigger pin.

Table 3-9 Function of the SIM_DET pin

No.	SIM_DET	function
1	High level	USIM card insertion. If the USIM card is present, SIM_DET should be High.
2	Low level	USIM card removal. If the USIM card is absent, SIM_DET should be Low.

Figure 3-17 Connections of the SIM_DET pin

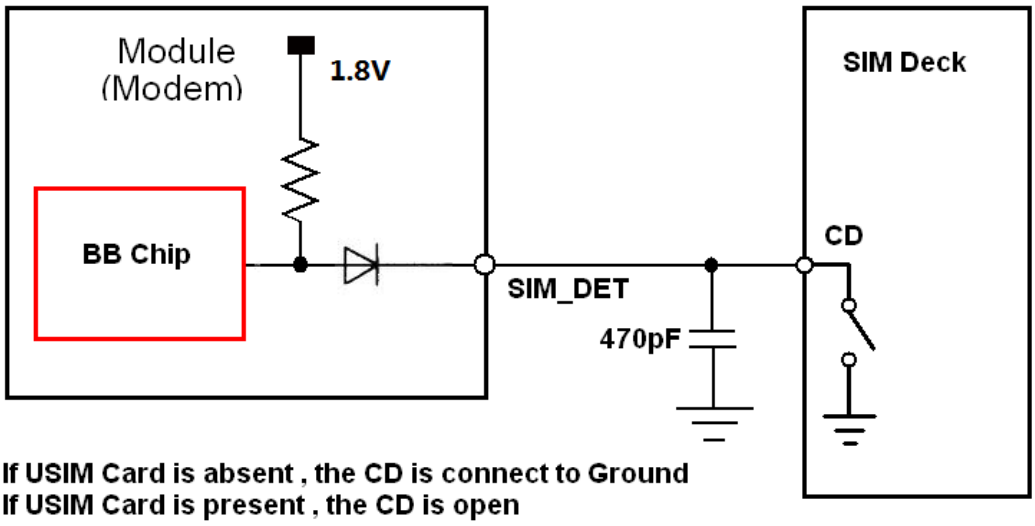

CD is a pin detecting of USIM in the SIM socket, in normal, there will be a detect pin in the SIM socket.

CAUTION

- It is recommended not to add a diode on the SIM_DET pin outside the ME906 module.
- The normal SHORT SIM connector should be employed. The logic of SIM_DET is shown as Figure 3-18 . High represents that SIM is inserted; Low represents that SIM is removed.
- When SIM is inserted (hot), SIM_DET will change from Low to High;
- When SIM is removed (hot), SIM_DET will change from High to Low;
- ME906 will detect the level of SIM_DET to support the hot swap.

Figure 3-18 Logic of SIM_DET

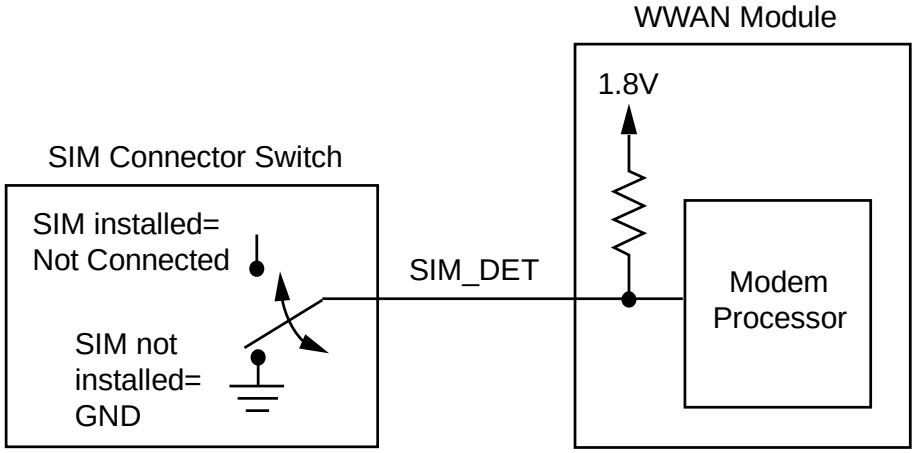

3.5 USB Interface

The ME906 is compliant with USB 2.0 high speed protocol. The USB input/output lines are following USB 2.0 specifications. Definition of the USB interface:

Pin No.	Pin Name	I/O	Description
7	USB_D+	I/O	USB data signal D+
9	USB_D-	I/O	USB data signal D-

Figure 3-19 Recommended circuit of USB interface

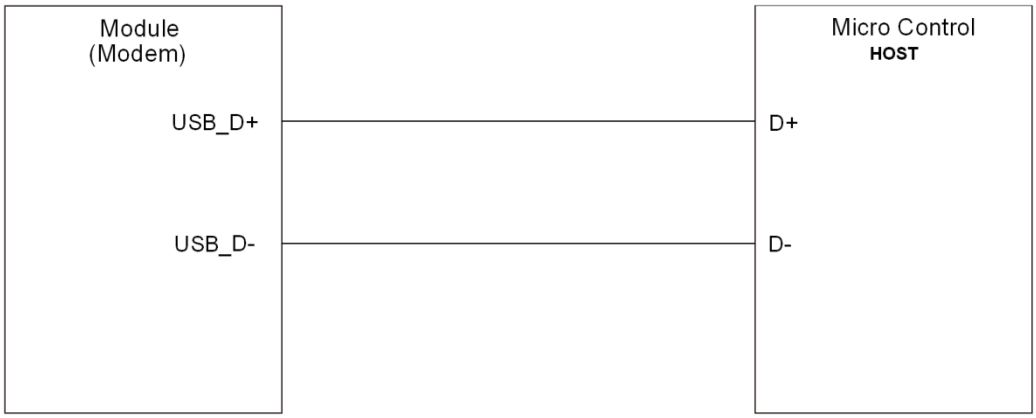

Figure 3-20 shows the timing sequence between 3.3V and USB D+.

Figure 3-20 ME906 USB D+ and 3.3V power on timing sequence

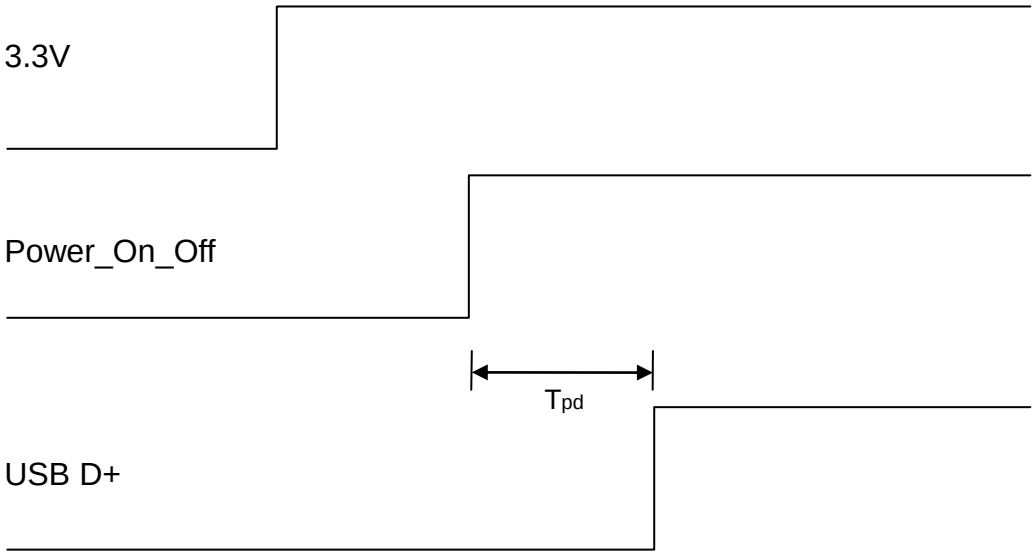

Parameter	Remarks	Time(Nominal value)	Unit
T_{pd}	Power valid to USB D+ high	12	s

NOTE
The layout design of this circuit on the host board should comply with the USB 2.0 high speed protocol, with differential characteristic impedance of 90 Ω.

3.6 USIM Card Interface

3.6.1 Overview

The ME906 module provides a USIM card interface complying with the ISO 7816-3 standard and supports both 1.8 V and 3.0 V USIM cards.

Table 3-10 USIM card interface signals

Pin No.	Pin Name	I/O	Description	DC Characteristics (V)		
				Min.	Typ.	Max.
30	UIM_RESET	O	USIM Reset	–0.3	1.8/2.85	1.98/3.3
32	UIM_CLK	O	USIM clock	–0.3	1.8/2.85	1.98/3.3
34	UIM_DATA	IO	USIM DATA	–0.3	1.8/2.85	1.98/3.3
36	UIM_PWR	PO	USIM POWER	–0.3	1.8/2.85	1.98/3.3

3.6.2 Circuit Recommended for the USIM Card Interface

As the ME906 module is not equipped with an USIM socket, you need to place an USIM socket on the user interface board.

Figure 3-21 shows the circuit of the USIM card interface.

Figure 3-21 Circuit of the USIM card interface

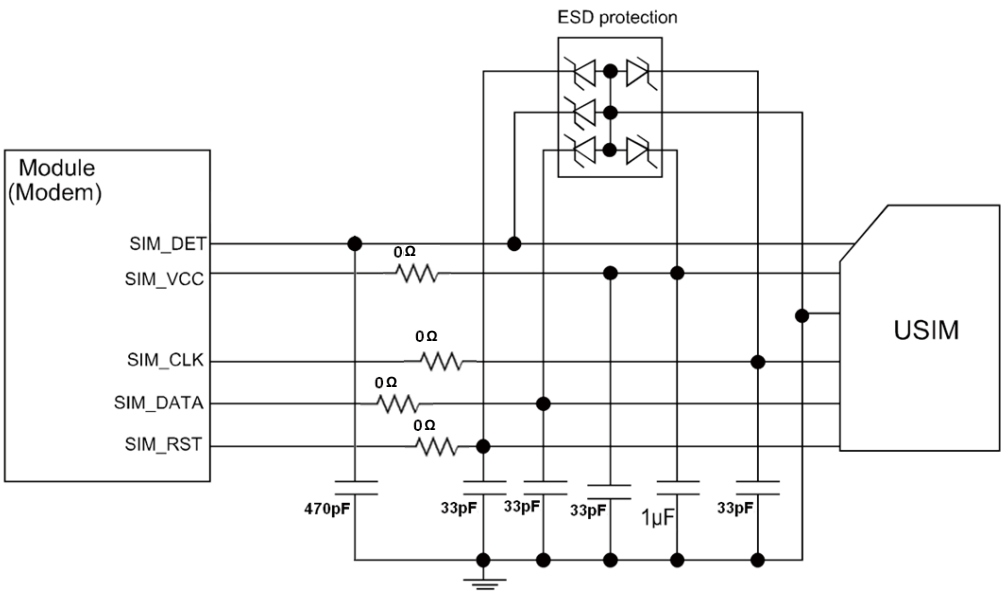

CAUTION

- The ESD protection component should choose low capacitance. The capacitance of the component should be lower than **10 pF**.
- To meet the requirements of 3GPP TS 51.010-1 protocols and electromagnetic compatibility (EMC) authentication, the USIM socket should be placed near the M.2 interface (it is recommended that the PCB circuit connects the M.2 interface and the USIM socket does not exceed 100 mm), because a long circuit may lead to wave distortion, thus affecting signal quality.
- It is recommended that you wrap the area adjacent to the SIM_CLK and SIM_DATA signal wires with ground. The Ground pin of the USIM socket and the Ground pin of the USIM card must be well connected to the power Ground pin supplying power to the ME906 module.
- A 100 nF capacitor (0402 package is recommended so that greater capacitance such as 1 uF can be employed if necessary) and a 33 pF capacitor are placed between the SIM_PWR and Ground pins in parallel. Three 33 pF capacitors are placed between the SIM_DATA and Ground pins, the SIM_RST and Ground pins, and the SIM_CLK and Ground pins in parallel to filter interference from RF signals.
- It is recommended to take electrostatic discharge (ESD) protection measures near the USIM card socket. Transient voltage suppressor diode should be placed as close as possible to the USIM socket, and the Ground pin of the ESD protection component is well connected to the power Ground pin that supplies power to the ME906 module.

3.7 Tunable Antenna Control

The module provides 4 tunable antenna control pins.

Table 3-11 List of ANTCTL pins

Pin No.	Pin Name	I/O	Description	DC Characteristics(V)		
				Min.	Typ.	Max.
59	ANTCTL0	O	Tunable antenna control signal bit 0. It is a push-pull type GPIO.	–0.3	1.8	2.1
61	ANTCTL1	O	Tunable antenna control signal bit 1. It is a push-pull type GPIO.	–0.3	1.8	2.1
63	ANTCTL2	O	Tunable antenna control signal bit 2. It is a push-pull type GPIO.	–0.3	1.8	2.1
65	ANTCTL3	O	Tunable antenna control signal bit 3. It is a push-pull type GPIO.	–0.3	1.8	2.1

The mapping of each band to ANTCTL outputs is configurable, and the default output is 0 V.

3.8 Config Pins

The module provides 4 config pins. ME906 is configured as WWAN-SSIC 0.

Table 3-12 List of CONFIG pins

Pin No.	Pin Name	I/O	Description	DC Characteristics(V)		
				Min.	Typ.	Max.
1	CONFIG_3	O	Connected to GND internally.	-	0	-
21	CONFIG_0	O	Not Connected internally.	-	-	-
69	CONFIG_1	O	Connected to GND internally.	-	0	-
75	CONFIG_2	O	Connected to GND internally.	-	0	-

In the M.2 spec, the 4 pins are defined as shown in Table 3-13 .

Table 3-13 List of Config pins

Config_0 (Pin 21)	Config_1 (Pin 69)	Config_2 (Pin 75)	Config_3 (Pin 1)	Module type and Main host interface	Port Configuration
NC	Ground	Ground	Ground	WWAN-SSIC	0

The GPIO0~7 pins have configurable assignments. There are 4 possible functional pin out configurations. These 4 configurations are called Port Config0~3. In each Port Configuration each GPIO is defined as a specific functional pin. The GPIO pin assignment can be seen in Table 3-14 . ME906 supports Config 0. But the audio function is not implemented in ME906.

Table 3-14 GPIO pin function assignment per port configuration (not supported by default)

GPIO Pin	Port Config 0 (GNSS+Audio ver1)
GPIO_0 (Pin40)	GNSS_SCL
GPIO_1 (Pin 42)	GNSS_SDA
GPIO_2 (Pin 44)	GNSS_IRQ
GPIO_3 (Pin 46)	SYSCLK
GPIO_4 (Pin 48)	TX_Blanking
GPIO_5 (Pin 20)	Audio_0 (not supported)
GPIO_6 (Pin 22)	Audio_1 (not supported)
GPIO_7 (Pin 24)	Audio_2 (not supported)

3.9 Reserved Pins

The module provides some reserved pins. All of reserved pins cannot be used by the customer. **All of them should be Not Connected (NC).** If customer wants to have other special functions, please contact us.

Table 3-15 List of reserved pins

Pin No.	Pin Name	I/O	Description	DC Characteristics(V)		
				Min.	Typ.	Max.
20	Reserved	-	Reserved for Future Use	–0.3	1.8	2.1
22	Reserved	-	Reserved for Future Use	–0.3	1.8	2.1
24	Reserved	-	Reserved for Future Use	–0.3	1.8	2.1

3.10 NC Pins

The module has some NC pins. All of NC pins are not connected in the module.

Table 3-16 List of NC pins

Pin No.	Pin Name	I/O	Description	DC Characteristics(V)		
				Min.	Typ.	Max.
28, 29, 31, 35, 37, 38, 41, 43, 47, 49, 50,52, 53, 54, 55, 56, 58, 68	NC	-	Not Connected	-	-	-

3.11 RF Antenna Interface

3.11.1 RF Connector location

ME906 module provides 2 antenna connectors for connecting the external antennas.

Figure 3-22 RF antenna connectors

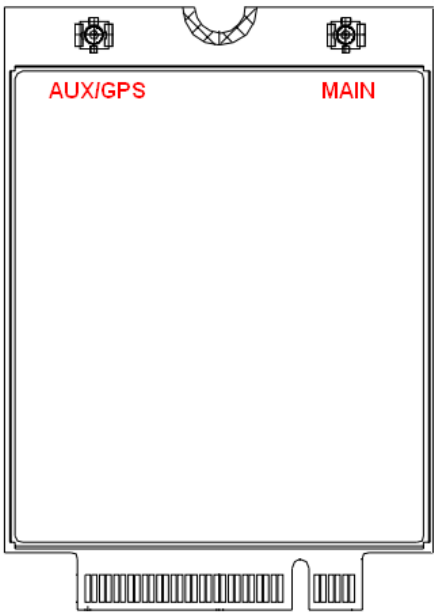

3.11.2 Coaxial RF Connector Guidelines

- The antenna interface must be used with coaxial cables with characteristic impedance of 50 Ω.
- The ME906 module supports the buckled RF connector antenna connection methods: buckled RF connector MM4829-2702RA4 by MURATA or other equivalent connectors.

Figure 3-23 shows the RF connector dimensions.

Figure 3-23 RF connector dimensions

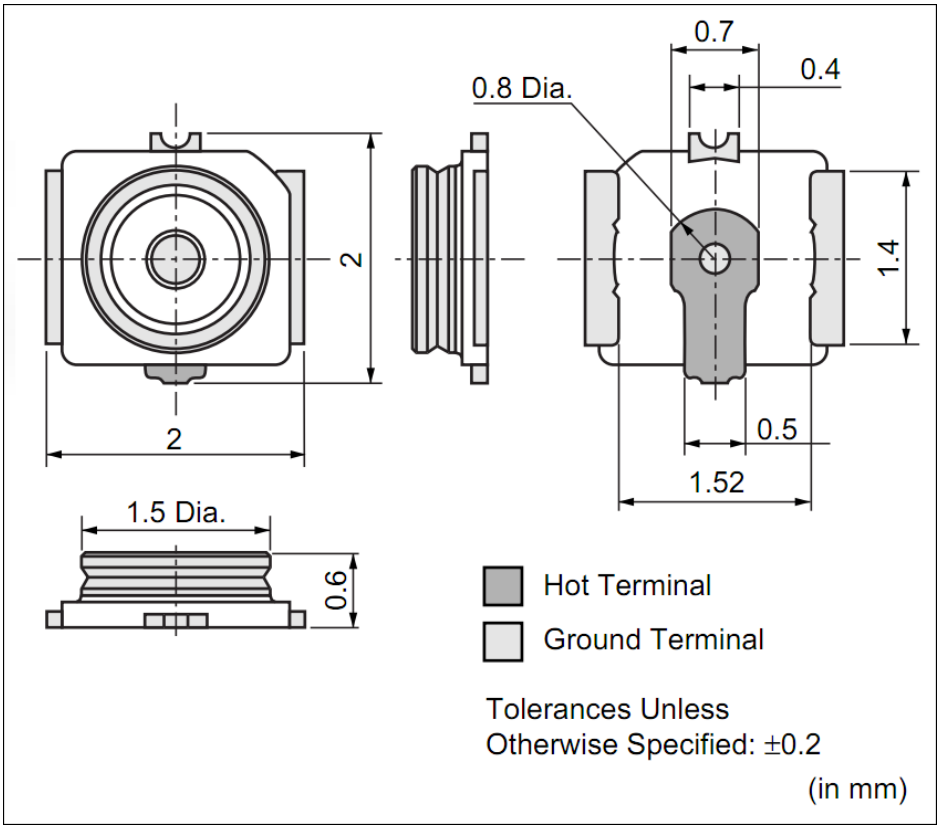

Table 3-17 The major specifications of the RF connector

Rated Condition		Environmental Condition
Frequency range	DC to 6 GHz	Temperature range: –40°C to +85°C
Characteristic impedance	50 Ω	

There are two kinds of coaxial cables (0.81 mm and 1.13 mm) mating the RF connector in the ME906.

1.13 mm cable is recommended.

Figure 3-24 shows the specifications of 0.81 mm coaxial cable mating the recommended RF connector.

Figure 3-24 Specifications of 0.81 mm coaxial cable mating with the RF connector

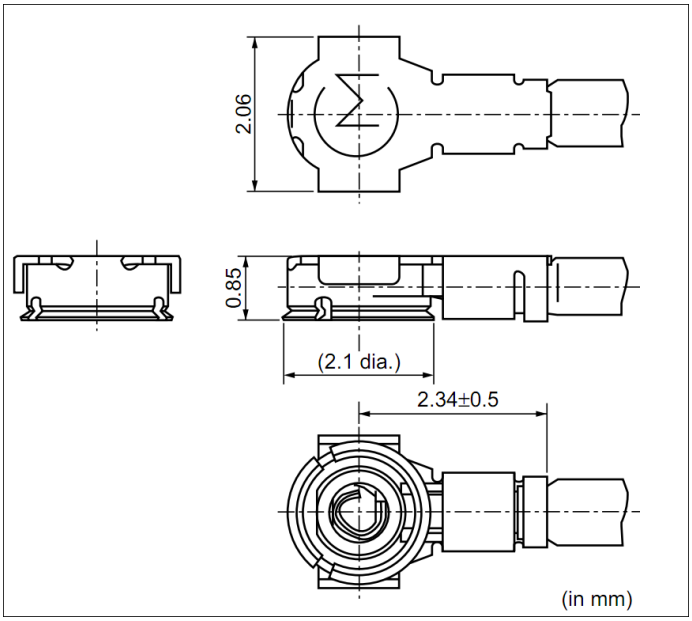

Figure 3-25 shows the connection between the RF connector and the 0.81 mm cable.

Figure 3-25 Connection between the RF connector and the 0.81 mm cable

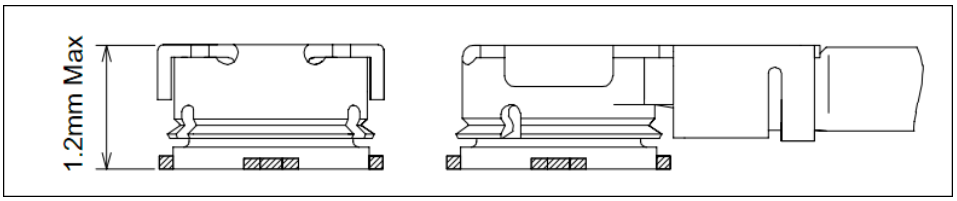

Figure 3-26 shows the specifications of 1.13 mm coaxial cable mating the recommended RF connector.

Figure 3-26 Specifications of 1.13 mm coaxial cable mating with the RF connector

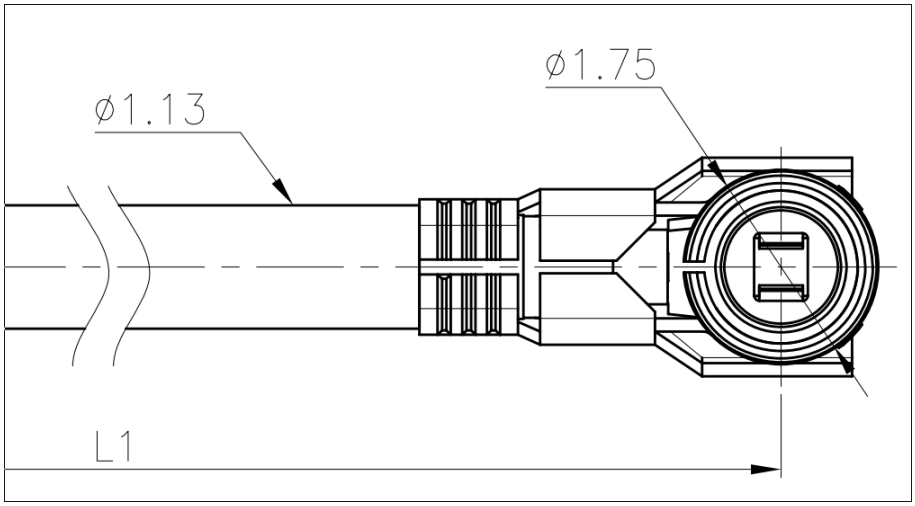

Figure 3-27 shows the connection between the RF connector and the 1.13 mm cable.

Figure 3-27 Connection between the RF connector and the 1.13 mm cable

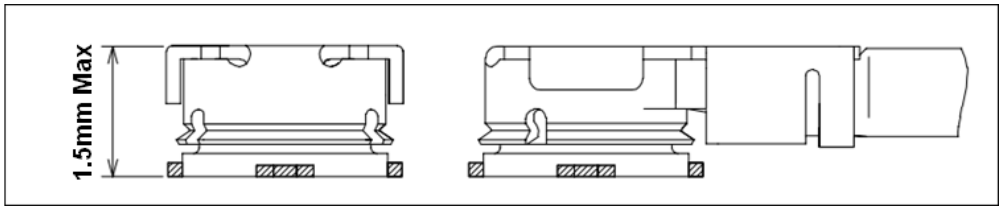

4 RF Specifications

4.1 About This Chapter

This chapter describes the RF specifications of the ME906 module, including:

- Operating Frequencies
- Conducted RF Measurement
- Conducted Rx Sensitivity and Tx Power
- Antenna Design Requirements

4.2 Operating Frequencies

Table 4-1 to Table 4-3 show the RF bands supported by ME906.

Table 4-1 RF bands of ME906V

Operating Band	Tx	Rx
UMTS Band I	1920 MHz–1980 MHz	2110 MHz–2170 MHz
UMTS Band II	1850 MHz–1910 MHz	1930 MHz–1990 MHz
UMTS Band IV(AWS)	1710 MHz–1755 MHz	2110 MHz–2155 MHz
UMTS Band V	824 MHz–849 MHz	869 MHz–894 MHz
UMTS Band VIII	880 MHz–915 MHz	925 MHz–960 MHz
GSM 850	824 MHz–849 MHz	869 MHz–894 MHz
GSM 900	880 MHz–915 MHz	925 MHz–960 MHz
GSM 1800(DCS)	1710 MHz–1785 MHz	1805 MHz–1880 MHz
GSM 1900(PCS)	1850 MHz–1910 MHz	1930 MHz–1990 MHz
LTE Band I	1920 MHz–1980 MHz	2110 MHz–2170 MHz
LTE Band II	1850 MHz–1910 MHz	1930 MHz–1990 MHz

Operating Band	Tx	Rx
LTE Band IV	1710 MHz–1755 MHz	2110 MHz–2155 MHz
LTE Band V	824 MHz–849 MHz	869 MHz–894 MHz
LTE Band VIII	880 MHz–915 MHz	925 MHz–960 MHz
LTE Band XIII	777 MHz–787 MHz	746 MHz–756 MHz
LTE Band XVII	704 MHz–716 MHz	734 MHz–746 MHz
CDMA 800(BC0)	824 MHz–849 MHz	869 MHz–894 MHz
CDMA 1900(BC1)	1850 MHz–1910 MHz	1930 MHz–1990 MHz
GPS L1	-	1574.42 MHz–1576.42 MHz
GLONASS	-	1597.55 MHz–1605.89 MHz

Table 4-2 RF bands of ME906E

Operating Band	Tx	Rx
UMTS Band I	1920 MHz–1980 MHz	2110 MHz–2170 MHz
UMTS Band II	1850 MHz–1910 MHz	1930 MHz–1990 MHz
UMTS Band V	824 MHz–849 MHz	869 MHz–894 MHz
UMTS Band VIII	880 MHz–915 MHz	925 MHz–960 MHz
GSM 850	824 MHz–849 MHz	869 MHz–894 MHz
GSM 900	880 MHz–915 MHz	925 MHz–960 MHz
GSM 1800(DCS)	1710 MHz–1785 MHz	1805 MHz–1880 MHz
GSM 1900(PCS)	1850 MHz–1910 MHz	1930 MHz–1990 MHz
LTE Band I	1920 MHz–1980 MHz	2110 MHz–2170 MHz
LTE Band II	1850 MHz–1910 MHz	1930 MHz–1990 MHz
LTE Band III	1710 MHz–1785 MHz	1805 MHz–1880 MHz
LTE Band V	824 MHz–849 MHz	869 MHz–894 MHz
LTE Band VIII	880 MHz–915 MHz	925 MHz–960 MHz
LTE Band VII	2500 MHz–2570 MHz	2620 MHz–2690 MHz
LTE Band XX	832 MHz–862 MHz	791 MHz–821 MHz
GPS L1	-	1574.42 MHz–1576.42 MHz
GLONASS	-	1597.55 MHz–1605.89 MHz

Table 4-3 RF bands of ME906J

Operating Band	Tx	Rx
UMTS Band I	1920 MHz–1980 MHz	2110 MHz–2170 MHz
UMTS Band V	824 MHz–849 MHz	869 MHz–894 MHz
UMTS Band VI	830 MHz–840 MHz	875 MHz–885 MHz
UMTS Band XIX	830 MHz–845 MHz	875 MHz–890 MHz
LTE Band I	1920 MHz–1980 MHz	2110 MHz–2170 MHz
LTE Band XI	1427.9 MHz–1447.9 MHz	1475.9 MHz–1495.9 MHz
LTE Band XVIII	815 MHz–830 MHz	860 MHz–875 MHz
LTE Band XIX	830 MHz–845 MHz	875 MHz–890 MHz
LTE Band XXI	1447.9 MHz–1462.9 MHz	1495.9 MHz–1510.9 MHz
CDMA 800(BC0)	824 MHz–849 MHz	869 MHz–894 MHz
CDMA 2100(BC6)	1920 MHz–1980 MHz	2110 MHz–2170 MHz
GPS L1	-	1574.42 MHz–1576.42 MHz
GLONASS	-	1597.55 MHz–1605.89 MHz

4.3 Conducted RF Measurement

4.3.1 Test Environment

Test instrument	R&S CMU200, R&S CMW500 ,Agilent E5515C
Power supply	Keithley 2303, Agilent 66319
RF cable for testing	Rosenberger Precision Microwave Cable
Murata coaxial cable	MXHP32HP1000

NOTE

- The compensation for different frequency bands relates to the cable and the test environment.
- The instrument compensation needs to be set according to the actual cable conditions.

4.3.2 Test Standards

Huawei modules meet 3GPP TS 51.010-1, 3GPP TS 34.121-1, 3GPP TS 36.521-1, 3GPP2 C.S0011and 3GPP2 C.S0033 test standards. Each module passes strict tests at the factory and thus the quality of the modules is guaranteed.

4.4 Conducted Rx Sensitivity and Tx Power

4.4.1 Conducted Receive Sensitivity

The conducted receive sensitivity is a key parameter that indicates the receiver performance of ME906.

The **3GPP Protocol Claim** column in Table 4-4 to Table 4-6 lists the required minimum values, and the **Test Value** column lists the tested values of ME906.

Table 4-4 ME906V conducted Rx sensitivity (Unit: dBm)

Item		3GPP Protocol Claim (dBm)	ME906V Test Value (dBm)		
			Min.	Typ.	Max.
GSM850	GMSK (BER < 2.43%)	< –102	-	–109	–107
	8PSK (MCS5, BLER < 10%)	< –98	-	–102	–100
GSM900	GMSK (BER < 2.43%)	< –102	-	–109	–107
	8PSK (MCS5, BLER < 10%)	< –98	-	–102	–100
GSM1800	GMSK (BER < 2.43%)	< –102	-	–108.5	–107
	8PSK (MCS5, BLER < 10%)	< –98	-	–102	–100
GSM1900	GMSK (BER < 2.43%)	< –102	-	–108.5	–107
	8PSK (MCS5, BLER < 10%)	< –98	-	–102	–100
UMTS Band I (BER < 0.1%)		< –106.7	-	–110	–108
UMTS Band II (BER < 0.1%)		< –104.7	-	–109.5	–108
UMTS Band IV (BER < 0.1%)		< –106.7	-	–110	–108
UMTS Band VIII (BER < 0.1%)		< –103.7	-	–110	–108
UMTS Band V (BER < 0.1%)		< –104.7	-	–110	–108
LTE Band I (FDD QPSK throughput > 95%)		< –96.3 (10 MHz)	-	–101	–98
LTE Band II (FDD QPSK throughput > 95%)		< –94.3 (10 MHz)	-	–99	–97

Item	3GPP Protocol Claim (dBm)	ME906V Test Value (dBm)		
		Min.	Typ.	Max.
LTE Band IV (FDD QPSK throughput > 95%)	< –96.3 (10 MHz)	-	–101	–98
LTE Band V (FDD QPSK throughput > 95%)	< –94.3 (10 MHz)	-	–101	–98
LTE Band VIII (FDD QPSK throughput > 95%)	< –93.3 (10 MHz)	-	–101	–98
LTE Band XIII (FDD QPSK throughput > 95%)	< –93.3 (10 MHz)	-	–101	–98
LTE Band XVII (FDD QPSK throughput > 95%)	< –93.3 (10 MHz)	-	–101	–98
CDMA 800(BC0) (FER < 0.5%)	≤ –104	-	–108	–105
CDMA 1900(BC1) (FER < 0.5%)	≤ –104	-	–107	–105

Table 4-5 ME906E conducted Rx sensitivity (Unit: dBm)

Item		3GPP Protocol Claim (dBm)	ME906E Test Value (dBm)		
			Min.	Typ.	Max.
GSM850	GMSK (BER < 2.43%)	< –102	-	–109	–107
	8PSK (MCS5, BLER < 10%)	< –98	-	–102	–100
GSM900	GMSK (BER < 2.43%)	< –102	-	–109	–107
	8PSK (MCS5, BLER < 10%)	< –98	-	–102	–100
GSM1800	GMSK (BER < 2.43%)	< –102	-	–108.5	–107
	8PSK (MCS5, BLER < 10%)	< –98	-	–102	–100
GSM1900	GMSK (BER < 2.43%)	< –102	-	–108.5	–107
	8PSK (MCS5, BLER < 10%)	< –98	-	–102	–100
UMTS Band I (BER < 0.1%)		< –106.7	-	–110	–108

Item	3GPP Protocol Claim (dBm)	ME906E Test Value (dBm)		
		Min.	Typ.	Max.
UMTS Band II (BER < 0.1%)	< –104.7	-	–109.5	–108
UMTS Band V (BER < 0.1%)	< –106.7	-	–110	–108
UMTS Band VIII (BER < 0.1%)	< –103.7	-	–110	–108
LTE Band I (FDD QPSK throughput > 95%)	< –96.3 (10 MHz)	-	–101	–98
LTE Band II (FDD QPSK throughput > 95%)	< –94.3 (10 MHz)	-	–99	–97
LTE Band III (FDD QPSK throughput > 95%)	< –93.3 (10 MHz)	-	–100	–98
LTE Band V (FDD QPSK throughput > 95%)	< –94.3 (10 MHz)	-	–101	–98
LTE Band VII (FDD QPSK throughput > 95%)	< –94.3 (10 MHz)	-	–99	–97
LTE Band VIII (FDD QPSK throughput > 95%)	< –93.3 (10 MHz)	-	–101	–98
LTE Band XX (FDD QPSK throughput > 95%)	< –93.3 (10 MHz)	-	–101	–98

Table 4-6 ME906J conducted Rx sensitivity (Unit: dBm)

Item	3GPP Protocol Claim (dBm)	ME906J Test Value (dBm)		
		Min.	Typ.	Max.
UMTS Band I (BER < 0.1%)	< –106.7	-	–110	–108
UMTS Band V (BER < 0.1%)	< –104.7	-	–110	–108
UMTS Band VI (BER < 0.1%)	< –106.7	-	–110	–108
UMTS Band XIX (BER < 0.1%)	< –106.7	-	–110	–108
LTE Band I (FDD QPSK throughput > 95%)	< –96.3 (10 MHz)	-	–101	–98
LTE Band XI (FDD QPSK throughput > 95%)	< –96.3 (10 MHz)	-	–101	–98
LTE Band XVIII (FDD QPSK throughput > 95%)	< –96.3 (10 MHz)	-	–101	–98

Item	3GPP Protocol Claim (dBm)	ME906J Test Value (dBm)		
		Min.	Typ.	Max.
LTE Band XIX (FDD QPSK throughput > 95%)	< –96.3 (10 MHz)	-	–101	–98
LTE Band XXI (FDD QPSK throughput > 95%)	< –96.3 (10 MHz)	-	–101	–98
CDMA 800(BC0) (FER< 0.5%)	≤ –104	-	–108	–105
CDMA 2100(BC6) (FER< 0.5%)	≤ –104	-	–107	–105

Table 4-7 ME906 GPS specifications

TTFF	Cold start	42s
	Warm start	42s
	Hot Start	4s
Sensitivity	Cold start	–143 dBm
	Tracking	–157 dBm

NOTE

- The test values are the average of some test samples.
- LTE sensitivity is tested in SIMO (Main + AUX).
- The input satellites signal strength for GPS TTFF is –130 dBm.
- The circular error probability for GPS value is 50%.

4.4.2 Conducted Transmit Power

The conducted transmit power is another indicator that measures the performance of ME906. The conducted transmit power refers to the maximum power that the module tested at the antenna port can transmit. According to the 3GPP protocol, the required transmit power varies with the power class.

Table 4-8 to Table 4-10 list the required ranges of the conducted transmit power of ME906. The tested values listed in the Test Value column must range from the minimum power to the maximum power.

Table 4-8 ME906V conducted Tx power (Unit: dBm)

Item		3GPP Protocol Claim (dBm)	ME906V Test Value (dBm)		
			Min.	Typ.	Max.
GSM850	GMSK(1Tx Slot)	31 to 35	31.5	32.5	33.5
	8PSK(1Tx Slot)	24 to 30	25	26	27
GSM900	GMSK(1Tx Slot)	31 to 35	31.5	32.5	33.5
	8PSK(1Tx Slot)	24 to 30	25	26	27
GSM1800	GMSK(1Tx Slot)	28 to 32	28.5	29.5	30.5
	8PSK(1Tx Slot)	23 to 29	24	25	26
GSM1900	GMSK(1Tx Slot)	28 to 32	28.5	29.5	30.5
	8PSK(1Tx Slot)	23 to 29	24	25	26
UMTS Band I		21 to 25	22.5	23.5	24.5
UMTS Band II		21 to 25	22.5	23.5	24.5
UMTS Band IV		21 to 25	22.5	23.5	24.5
UMTS Band V		21 to 25	22.5	23.5	24.5
UMTS Band VIII		21 to 25	22.5	23.5	24.5
LTE Band I		21 to 25	22	23	24
LTE Band II		21 to 25	22	23	24
LTE Band IV		21 to 25	22	23	24
LTE Band V		21 to 25	22	23	24
LTE Band VIII		21 to 25	22	23	24
LTE Band XIII		21 to 25	22	23	24
LTE Band XVII		21 to 25	22	23	24
CDMA 800(BC0)		23 to 30	23	24	25
CDMA 1900(BC1)		23 to 30	23	24	25

Table 4-9 ME906E conducted Tx power (Unit: dBm)

Item		3GPP Protocol Claim (dBm)	ME906E Test Value (dBm)		
			Min.	Typ.	Max.
GSM850	GMSK(1Tx Slot)	31 to 35	31.5	32.5	33.5
	8PSK(1Tx Slot)	24 to 30	26	27	28

Item		3GPP Protocol Claim (dBm)	ME906E Test Value (dBm)		
			Min.	Typ.	Max.
GSM900	GMSK(1Tx Slot)	31 to 35	31.5	32.5	33.5
	8PSK(1Tx Slot)	24 to 30	26	27	28
GSM1800	GMSK(1Tx Slot)	28 to 32	28.5	29.5	30.5
	8PSK(1Tx Slot)	23 to 29	25	26	27
GSM1900	GMSK(1Tx Slot)	28 to 32	28.5	29.5	30.5
	8PSK(1Tx Slot)	23 to 29	25	26	27
UMTS Band I		21 to 25	22.5	23.5	24.5
UMTS Band II		21 to 25	22.5	23.5	24.5
UMTS Band V		21 to 25	22.5	23.5	24.5
UMTS Band VIII		21 to 25	22.5	23.5	24.5
LTE Band I		21 to 25	22	23	24
LTE Band II		21 to 25	22	23	24
LTE Band III		21 to 25	22	23	24
LTE Band V		21 to 25	22	23	24
LTE Band VIII		21 to 25	22	23	24
LTE Band VII		21 to 25	22	23	24
LTE Band XX		21 to 25	22	23	24

Table 4-10 ME906J conducted Tx power (Unit: dBm)

Item	3GPP Protocol Claim (dBm)	ME906J Test Value (dBm)		
		Min.	Typ.	Max.
UMTS Band I	21 to 25	22.5	23.5	24.5
UMTS Band V	21 to 25	22.5	23.5	24.5
UMTS Band VI	21 to 25	22.5	23.5	24.5
UMTS Band XIX	21 to 25	22.5	23.5	24.5
LTE Band I	21 to 25	22	23	24
LTE Band XI	21 to 25	22	23	24
LTE Band XVIII	21 to 25	22	23	24
LTE Band XIX	21 to 25	22	23	24

Item	3GPP Protocol Claim (dBm)	ME906J Test Value (dBm)		
		Min.	Typ.	Max.
LTE Band XXI	21 to 25	22	23	24
CDMA 800(BC0)	23 to 30	23	24	25
CDMA 2100(BC6)	20 to 24	20	21	22

NOTE
Maximum Power Reduction (MPR) of LTE is according to 3GPP TS 36.521-1 as below.

Modulation	RB Allocation	MPR(dB)
QPSK	≥ 1 RB, ≤ Partial RB	0
QPSK	> Partial RB	≤ 1
16QAM	≥ 1 RB, ≤ Partial RB	≤ 1
16QAM	> Partial RB	≤ 2

4.5 Antenna Design Requirements

4.5.1 Antenna Design Indicators

Antenna Efficiency

Antenna efficiency is the ratio of the input power to the radiated or received power of an antenna. The radiated power of an antenna is always lower than the input power due to the following antenna losses: return loss, material loss, and coupling loss. The efficiency of an antenna relates to its electrical dimensions. To be specific, the antenna efficiency increases with the electrical dimensions. In addition, the transmission cable from the antenna port of ME906 to the antenna is also part of the antenna. The cable loss increases with the cable length and the frequency. It is recommended that the cable loss is as low as possible, for example, MXHP32HP1000 made by Murata or equivalent.

The following antenna efficiency (free space) is recommended for ME906 to ensure high radio performance of the module:

- Efficiency of the primary antenna: ≥ 40% (below 960 MHz); ≥ 50% (over 1420 MHz)
- Efficiency of the secondary antenna: ≥ half of the efficiency of the primary antenna in receiving band;
- Efficiency of the GPS antenna: ≥ 50%

In addition, the efficiency should be tested with the transmission cable.

S11(VSWR) and S21

S11 indicates the degree to which the input impedance of an antenna matches the reference impedance (50 Ω). S11 shows the resonance feature and impedance bandwidth of an antenna. Voltage standing wave ratio (VSWR) is another expression of S11. S11 relates to the antenna efficiency. S11 can be measured with a vector analyzer.

The following S11 values are recommended for the antenna of ME906:

- S11 of the primary antenna ≤ –6 dB
- S11 of the secondary antenna ≤ –6 dB
- S11 of the GPS antenna ≤ –10 dB

In addition, S11 is less important than the efficiency, and S11 has not strong correlation to wireless performance.

S21 indicates the isolation between two antennas.

Isolation

For a wireless device with multiple antennas, the power of different antennas is coupled with each other. Antenna isolation is used to measure the power coupling. The power radiated by an antenna might be received by an adjacent antenna, which decreases the antenna radiation efficiency and affects the running of other devices. To avoid this problem, evaluate the antenna isolation as sufficiently as possible at the early stage of antenna design.

Antenna isolation depends on the following factors:

- Distance between antennas
- Antenna type
- Antenna direction

The primary antenna must be placed as near as possible to the ME906 to minimize the cable length. The secondary antenna needs to be installed perpendicularly to the primary antenna. The secondary antenna can be placed farther away from the ME906. Antenna isolation can be measured with a two-port vector network analyzer.

The following S21 values are recommended for the antenna on laptops:

- Isolation between the primary and secondary antennas ≤ –12 dB
- Isolation between the primary antenna and the GPS antenna ≤ –15 dB
- Isolation between the primary (secondary) antenna and the Wi-Fi antenna ≤ –15 dB

Polarization

The polarization of an antenna is the orientation of the electric field vector that rotates with time in the direction of maximum radiation.

The linear polarization is recommended for the antenna of ME906.

Radiation Pattern

The radiation pattern of an antenna reflects the radiation features of the antenna in the remote field region. The radiation pattern of an antenna commonly describes the

power or field strength of the radiated electromagnetic waves in various directions from the antenna. The power or field strength varies with the angular coordinates (θ and φ), but is independent of the radial coordinates.

The radiation pattern of half wave dipole antennas is omnidirectional in the horizontal plane, and the incident waves of base stations are often in the horizontal plane. For this reason, the receiving performance is optimal.

The following radiation patterns are recommended for the antenna of ME906. **Primary/Secondary (GPS) antenna: omnidirectional**.

In addition, the secondary antenna's pattern should be complementary with the primary antenna's pattern.

Gain and Directivity

The radiation pattern of an antenna represents the field strength of the radiated electromagnetic waves in all directions, but not the power density that the antenna radiates in the specific direction. The directivity of an antenna, however, measures the power density that the antenna radiates.

Gain, as another important parameter of antennas, correlates closely to the directivity. The gain of an antenna takes both the directivity and the efficiency of the antenna into account. The appropriate antenna gain prolongs the service life of relevant batteries.

The following antenna gain is recommended for ME906.

- Gain of the master antenna ≤ 2.5 dBi
- Gain of the secondary antenna ≤ 2.5 dBi

ECC of the antenna

ECC is short for Envelope Correlation Coefficient. It is the cross-correlation value of the complex patterns of the master and diversity antenna. It indicates how similar the magnitude and the phase patterns of the two antennas are. If two antennas have no similarity, the ECC should be zero. Actually, the less ECC, the better diversity performance.

The following ECC is recommended for ME906.

ECC ≤ 0.5 (below 0.96 GHz); ECC ≤ 0.3 (above 1.4 GHz)

NOTE

- The antenna consists of the antenna body and the relevant RF transmission cable. Take the RF transmission cable into account when measuring any of the preceding antenna indicators.
- Huawei cooperates with various famous antenna suppliers who are able to make suggestions on antenna design, for example, Amphenol, Skycross, etc.

4.5.2 Interference

Besides the antenna performance, the interference on the user board also affects the radio performance (especially the TIS) of the module. To guarantee high performance of the module, the interference sources on the user board must be properly controlled.

On the user board, there are various interference sources, such as the LCD, CPU, audio circuits, and power supply. All the interference sources emit interference signals that affect the normal operation of the module. For example, the module sensitivity can be decreased due to interference signals. Therefore, during the design, you need to consider how to reduce the effects of interference sources on the module. You can take the following measures: Use an LCD with optimized performance; shield the LCD interference signals; shield the signal cable of the board; or design filter circuits.

Huawei is able to make technical suggestions on radio performance improvement of the module.

4.5.3 Antenna Requirements

The antenna for ME906 must fulfill the following requirements:

Table 4-11 Antenna Requirements of ME906V

Antenna Requirements	
Frequency range	Depending on frequency band(s) provided by the network operator, the customer must use the most suitable antenna for that/those band(s)
Bandwidth of main antenna	70 MHz in GSM850 80 MHz in GSM900 170 MHz in DCS 140 MHz in PCS 41 MHz in LTE Band XIII 42 MHz in LTE Band XVII 70 MHZ in UMTS 850/LTE Band V 80 MHz in UMTS 900/LTE Band VIII 445 MHz in UMTS 1700 (AWS)/LTE Band IV 140 MHz in UMTS 1900/LTE Band II 250 MHz in UMTS 2100/LTE Band I 70 MHz in CDMA 800 140 MHz in CDMA 1900

Antenna Requirements	
Bandwidth of diversity antenna	25MHz in GSM850 35MHz in GSM900 75MHz in DCS 60MHz in PCS 10MHz in LTE Band XIII 12MHz in LTE Band XVII 25MHz in UMTS 850/LTE Band V 35MHz in UMTS 900/LTE Band VIII 45MHz in UMTS 1700(AWS)/LTE Band IV 60MHz in UMTS 1900/LTE Band II 60MHz in UMTS 2100/LTE Band I 25MHz in CDMA 800 60MHz in CDMA 1900 35 MHz in GNSS
Gain	≤ 2.5 dBi
Impedance	50 Ω
VSWR absolute max.	≤ 3:1 (≤ 2:1 for GPS antenna)
VSWR recommended	≤ 2:1 (≤ 1.5:1 for GPS antenna)

Table 4-12 Antenna Requirements of ME906E

Antenna Requirements	
Frequency range	Depending on frequency band(s) provided by the network operator, the customer must use the most suitable antenna for that/those band(s)
Bandwidth of main antenna	70 MHz in GSM850 80 MHz in GSM900 170 MHz in DCS 140 MHz in PCS 250 MHz in UMTS 2100 /LTE Band 1 140 MHz in UMTS 1900/LTE Band 2 70 MHz in UMTS 850/LTE Band 5 80 MHz in UMTS 800/LTE Band 8 170 MHz in LTE Band 3 190 MHz in LTE Band 7 71 MHz in LTE Band 20

Antenna Requirements	
Bandwidth of diversity antenna	25 MHz in GSM850 35 MHz in GSM900 75 MHz in DCS 60 MHz in PCS 60 MHz in UMTS 2100/LTE Band 1 60 MHz in UMTS 1900/LTE Band 2 25 MHz in UMTS 850/LTE Band 5 35 MHz in UMTS 800/LTE Band 8 75 MHz in LTE Band 3 70 MHz in LTE Band 7 30 MHz in LTE Band 20 35 MHz in GNSS
Gain	≤ 2.5 dBi
Impedance	50 Ω
VSWR absolute max.	≤ 3:1(≤ 2:1 for GPS antenna)
VSWR recommended	≤ 2:1(≤ 1.5:1 for GPS antenna)

Table 4-13 Antenna Requirements of ME906J

Antenna Requirements	
Frequency range	Depending on frequency band(s) provided by the network operator, the customer must use the most suitable antenna for that/those band(s)
Bandwidth of main antenna	250 MHz in UMTS Band 1 70 MHZ in UMTS Band5 55 MHz in UMTS Band 6 60 MHz in UMTS Band 19 70 MHz in CDMA 800 250 MHz in CDMA 2100 250 MHz in LTE Band 1 68 MHz in LTE Band 11 60 MHz in LTE Band 18 60 MHz in LTE Band 19 63 MHz in LTE Band 21

Antenna Requirements	
Bandwidth of diversity antenna	60 MHz in UMTS Band 1 25 MHz in UMTS Band 5 10 MHz in UMTS Band 6 15MHz in UMTS Band 19 25 MHz in CDMA 800 60 MHz in CDMA 2100 60 MHz in LTE Band 1 20 MHz in LTE Band 11 15 MHz in LTE Band 18 15 MHz in LTE Band 19 15 MHz in LTE Band 21 35 MHz in GNSS
Gain	≤ 2.5 dBi
Impedance	50 Ω
VSWR absolute max.	≤ 3:1(≤ 2:1 for GPS antenna)
VSWR recommended	≤ 2:1(≤ 1.5:1 for GPS antenna)

4.5.4 Radio Test Environment

The antenna efficiency, antenna gain, radiation pattern, total radiated power (TRP), and total isotropic sensitivity (TIS) can be tested in a microwave testing chamber.

Huawei has a complete set of OTA test environments (SATIMO microwave testing chambers and ETS microwave testing chambers). The testing chambers are certified by professional organizations and are applicable to testing at frequencies ranging from 380 MHz to 6 GHz. The test items are described as follows:

Passive Tests

- Antenna efficiency
- Gain
- Pattern shape
- Envelope correlation coefficient

Active Tests

- **TRP:** GSM, UMTS, CDMA, and LTE systems
- **TIS:** GSM, UMTS, CDMA, and LTE systems

Figure 4-1 shows the SATIMO microwave testing chamber.

Figure 4-1 SATIMO microwave testing chamber

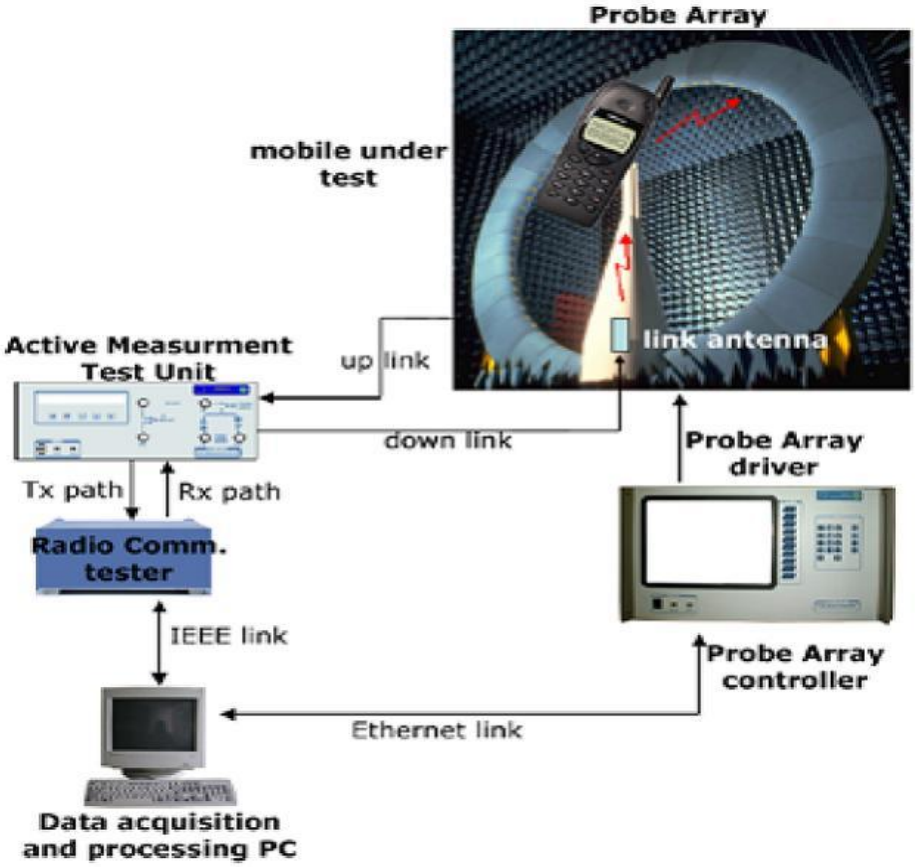

5 Electrical and Reliability Features

5.1 About This Chapter

This chapter describes the electrical and reliability features of the interfaces in the ME906 module, including:

- Absolute Ratings
- Operating and Storage Temperatures and Humidity
- Electrical Features of Application Interfaces
- Power Supply Features
- Reliability Features
- EMC and ESD Features

5.2 Absolute Ratings

WARNING

Table 5-1 lists the absolute ratings for the ME906 module. Using the ME906 module beyond these conditions may result in permanent damage to the module.

Table 5-1 Absolute ratings for the ME906 module

Symbol	Specification	Min.	Max.	Unit
3.3V	External power voltage	–0.5	5.0	V

5.3 Operating and Storage Temperatures and Humidity

Table 5-2 lists the operating and storage temperatures and humidity for the ME906 module.

Table 5-2 Operating and storage temperatures and humidity for the ME906 module

Specification	Min.	Max.	Unit
Normal operating temperatures[1]	–10	+55	°C
Extended temperatures[2]	–20	+70	°C
Ambient temperature for storage	–40	+85	°C

NOTE

[1]: When the ME906 module works at this temperature, all its RF specifications comply with the 3GPP and 3GPP2 (CDMA) RF specifications.

[2]: When the ME906 module works at this temperature, **NOT** all its RF specifications comply with the 3GPP and 3GPP2 (CDMA) RF specifications.

5.4 Electrical Features of Application Interfaces

Table 5-3 Electrical features of digital pins

Digital Pin	Description	Min.	Max.	Unit
BodySAR_N	V_{IH}	1.24	3.6	V
	V_{IL}	–0.3	0.3	V
RESET#	V_{IH}	1.24	2.1	V
	V_{IL}	–0.3	0.3	V
Power_On_Off	V_{IH}	1.24	3.6	V
	V_{IL}	–0.3	0.3	V
W_DISABLE#	V_{IH}	1.24	3.6	V
	V_{IL}	–0.3	0.3	V
GPS_DISABLE#	V_{IH}	1.24	3.6	V
	V_{IL}	–0.3	0.3	V
SIM_DET	V_{IH}	1.24	2.1	V
	V_{IL}	–0.3	0.3	V
ANTCTL[3:0]	V_{OH}	1.37	2.1	V
	V_{OL}	0	0.45	V

Table 5-4 Electrical features of digital pins in the I/O supply domain of the USIM interface

Parameter	Description	Min.	Max.	Note	Unit
V_{IH}	High-level input voltage	0.65 x V_{DDP_USIM}	3.3	V_{DDP_USIM}=1.8 V or 2.85 V	V
V_{IL}	Low-level input voltage	–0.3	0.25 x V_{DDP_USIM}	V_{DDP_USIM}=1.8 V or 2.85 V	V
V_{OH}	High-level output voltage	V_{DDP_USIM} - 0.45	2.85	V_{DDP_USIM}=1.8 V or 2.85 V	V
V_{OL}	Low-level output voltage	0	0.45	V_{DDP_USIM}=1.8 V or 2.85 V	V

5.5 Power Supply Features

5.5.1 Input Power Supply

Table 5-5 lists the requirements for input power of the ME906 module.

Table 5-5 Requirements for input power for the ME906 module

Parameter	Min.	Typ.	Max.	Ripple	Unit
3.3 V	3.135	3.3	4.4	0.05	V

Figure 5-1 Power supply during burst emission

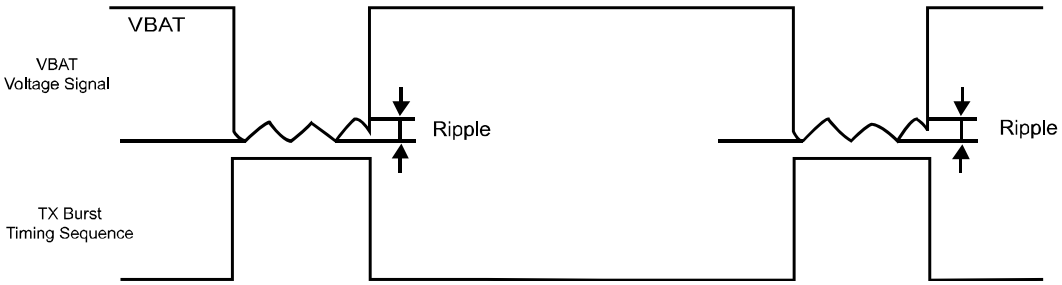

NOTE

The minimum value of the power supply must be guaranteed during the burst (with 2.5 A peak in GSM, GPRS or EGPRS mode).

Table 5-6 Requirements for input current of the ME906 module

Power	Peak (Max.) Max. Avg@100uS	Normal (Max.) Max. Avg@1S
3.3 V	2500 mA	1100 mA

5.5.2 Power Consumption

The power consumption of ME906 in different scenarios are respectively listed in Table 5-7 to Table 5-14 .

The power consumption listed in this section are tested when the power supply of ME906 module is normal voltage (3.3 V), and all of test values are measured at room temperature.

Table 5-7 Averaged power off DC power consumption of ME906

Description	Test Value (uA)	Notes/Configuration
	Typical	
Power off	150	Normal voltage (3.3 V) is ON and Power_On_Off pin is pulled low.

Table 5-8 Averaged standby DC power consumption of ME906 (WCDMA/HSDPA/LTE/CDMA/EVDO/GSM)

Description		Bands	Test Value (mA)[1]	Test Value (mA)[2]	Notes/Configuration
			Typical	Typical	
Sleep	LTE (sleep)	LTE bands	4.8	1.8	Module is powered up. DRX cycle=8 (2.56s) Module is registered on the network. USB is in suspend.
	HSPA+/WCDMA (sleep)	UMTS bands	4.8	1.8	Module is powered up. DRX cycle=8 (2.56s) Module is registered on the network. USB is in suspend.
	CDMA/EVDO (sleep)	CDMA bands	5.5	2.5	Module is powered up. SCI=2 (5.12s) Module is registered on the network. USB is in suspend.

Description		Bands	Test Value (mA)[1]	Test Value (mA)[2]	Notes/Configuration
			Typical	Typical	
	GPRS/EDGE (sleep)	GSM bands	5.0	2.2	Module is powered up. MFRMS=5 (1.175s) Module is registered on the network. USB is in suspend.
	Radio Off (sleep)	All bands	4.0	1.0	Module is powered up. RF is disabled. USB is in suspend.
Idle	LTE (idle)	LTE bands	28	28	Module is powered up. DRX cycle=8 (2.56s) Module is registered on the network, and no data is transmitted. USB is in active.
	HSPA+/WCDMA (idle)	UMTS bands	28	28	Module is powered up. DRX cycle=8 (2.56s) Module is registered on the network, and no data is transmitted. USB is in active.
	CDMA/EVDO (idle)	CDMA bands	28	28	Module is powered up. SCI=2 (5.12s) Module is registered on the network, and no data is transmitted. USB is in active.
	GPRS/EDGE (idle)	GSM bands	28	28	Module is powered up. MFRMS=5 (1.175s) Module is registered on the network, and no data is transmitted. USB is in active.
	Radio Off (idle)	All bands	28	28	Module is powered up. RF is disabled. USB is in active.

NOTE

[1] The test values in this list are the averaged standby DC power consumption of ME906 (WCDMA/HSDPA/LTE/CDMA/EVDO/GSM) when the software version is 11.xxx.xx.xx.xx.

[2] The test values in this list are the averaged standby DC power consumption of ME906 (WCDMA/HSDPA/LTE/CDMA/EVDO/GSM) when the software version is 12.xxx.xx.xx.xx.

Table 5-9 Averaged Data Transmission DC power consumption of ME906V (WCDMA/HSDPA/LTE/CDMA/EVDO)

Description	Band	Test Value (mA)	Notes/Configuration
		Typical	
WCDMA	Band I (IMT2100)	180	1 dBm Tx Power
		220	10 dBm Tx Power
		640	23.5 dBm Tx Power
	Band II (PCS 1900)	190	1 dBm Tx Power
		220	10 dBm Tx Power
		650	23.5 dBm Tx Power
	Band IV (AWS)	190	1 dBm Tx Power
		270	10 dBm Tx Power
		510	23.5 dBm Tx Power
	Band V (850 MHz)	180	1 dBm Tx Power
		210	10 dBm Tx Power
		500	23.5 dBm Tx Power
	Band VIII (900 MHz)	170	1 dBm Tx Power
		220	10 dBm Tx Power
		510	23.5 dBm Tx Power
HSDPA	Band I (IMT2100)	190	1 dBm Tx Power
		240	10 dBm Tx Power
		680	23.5 dBm Tx Power
	Band II (PCS 1900)	200	1 dBm Tx Power
		250	10 dBm Tx Power
		720	23.5 dBm Tx Power
	Band IV (AWS)	210	1 dBm Tx Power
		290	10 dBm Tx Power
		680	23.5 dBm Tx Power

Description	Band	Test Value (mA)	Notes/Configuration
		Typical	
	Band V (850 MHz)	190	1 dBm Tx Power
		220	10 dBm Tx Power
		620	23.5 dBm Tx Power
	Band VIII (900 MHz)	180	1 dBm Tx Power
		230	10 dBm Tx Power
		600	23.5 dBm Tx Power
LTE	Band I	330	1 dBm Tx Power
		370	10 dBm Tx Power
		760	23 dBm Tx Power
	Band II	310	1 dBm Tx Power
		370	10 dBm Tx Power
		770	23 dBm Tx Power
	Band IV	340	1 dBm Tx Power
		400	10 dBm Tx Power
		750	23 dBm Tx Power
	Band V	330	1 dBm Tx Power
		350	10 dBm Tx Power
		630	23 dBm Tx Power
	Band VIII	330	1 dBm Tx Power
		380	10 dBm Tx Power
		630	23 dBm Tx Power
	Band XIII	340	1 dBm Tx Power
		390	10 dBm Tx Power
		720	23 dBm Tx Power
	Band XVII	340	1 dBm Tx Power
		380	10 dBm Tx Power
		720	23 dBm Tx Power
CDMA	BC0	170	1 dBm Tx Power
		210	10 dBm Tx Power
		610	24 dBm Tx Power

Description	Band	Test Value (mA)	Notes/Configuration
		Typical	
	BC1	190	1 dBm Tx Power
		220	10 dBm Tx Power
		710	24 dBm Tx Power
EVDO	BC0	190	1 dBm Tx Power
		220	10 dBm Tx Power
		610	24 dBm Tx Power
	BC1	200	1 dBm Tx Power
		240	10 dBm Tx Power
		720	24 dBm Tx Power

Table 5-10 Averaged DC power consumption of ME906V (GPRS/EDGE)

Description	Test Value (mA)	PCL	Notes/Configuration
	Typical		
GPRS850	320	5	1 Up/1 Down
	550		2 Up/1 Down
	870		4 Up/1 Down
	130	10	1 Up/1 Down
	180		2 Up/1 Down
	250		4 Up/1 Down
GPRS900	350	5	1 Up/1 Down
	580		2 Up/1 Down
	770		4 Up/1 Down
	130	10	1 Up/1 Down
	180		2 Up/1 Down
	250		4 Up/1 Down
GPRS1800	200	0	1 Up/1 Down
	310		2 Up/1 Down
	490		4 Up/1 Down
	120	10	1 Up/1 Down

Description	Test Value (mA)	PCL	Notes/Configuration
	Typical		
	170		2 Up/1 Down
	210		4 Up/1 Down
GPRS1900	200	0	1 Up/1 Down
	310		2 Up/1 Down
	520		4 Up/1 Down
	120	10	1 Up/1 Down
	160		2 Up/1 Down
	210		4 Up/1 Down
EDGE850	210	8	1 Up/1 Down
	350		2 Up/1 Down
	560		4 Up/1 Down
	150	15	1 Up/1 Down
	180		2 Up/1 Down
	230		4 Up/1 Down
EDGE900	220	8	1 Up/1 Down
	370		2 Up/1 Down
	630		4 Up/1 Down
	150	15	1 Up/1 Down
	180		2 Up/1 Down
	250		4 Up/1 Down
EDGE1800	170	2	1 Up/1 Down
	260		2 Up/1 Down
	420		4 Up/1 Down
	130	10	1 Up/1 Down
	160		2 Up/1 Down
	230		4 Up/1 Down
EDGE1900	170	2	1 Up/1 Down
	250		2 Up/1 Down
	390		4 Up/1 Down
	120	10	1 Up/1 Down

Description	Test Value (mA)	PCL	Notes/Configuration
	Typical		
	160		2 Up/1 Down
	220		4 Up/1 Down

Table 5-11 Averaged Data Transmission DC power consumption of ME906E (WCDMA/HSDPA/LTE)

Description	Band	Test Value (mA)	Notes/Configuration
		Typical	
WCDMA	Band I (IMT2100)	160	1 dBm Tx Power
		200	10 dBm Tx Power
		670	23.5 dBm Tx Power
	Band II (PCS 1900)	160	1 dBm Tx Power
		200	10 dBm Tx Power
		690	23.5 dBm Tx Power
	Band V (850 MHz)	160	1 dBm Tx Power
		200	10 dBm Tx Power
		530	23.5 dBm Tx Power
	Band VIII (900 MHz)	180	1 dBm Tx Power
		270	10 dBm Tx Power
		600	23.5 dBm Tx Power
HSDPA	Band I (IMT2100)	240	1 dBm Tx Power
		290	10 dBm Tx Power
		680	23.5 dBm Tx Power
	Band II (PCS 1900)	240	1 dBm Tx Power
		290	10 dBm Tx Power
		700	23.5 dBm Tx Power
	Band V (850 MHz)	230	1 dBm Tx Power
		270	10 dBm Tx Power
		550	23.5 dBm Tx Power
	Band VIII	250	1 dBm Tx Power

Description	Band	Test Value (mA)	Notes/Configuration
		Typical	
	(900 MHz)	340	10 dBm Tx Power
		620	23.5 dBm Tx Power
LTE	LTE Band I	310	1 dBm Tx Power
		350	10 dBm Tx Power
		800	23dBm Tx Power
	LTE Band II	300	1 dBm Tx Power
		350	10 dBm Tx Power
		740	23 dBm Tx Power
	LTE Band III	300	1 dBm Tx Power
		350	10 dBm Tx Power
		770	23 dBm Tx Power
	LTE Band V	290	1 dBm Tx Power
		330	10 dBm Tx Power
		620	23 dBm Tx Power
	LTE Band VIII	300	1 dBm Tx Power
		340	10 dBm Tx Power
		690	23 dBm Tx Power
	LTE Band VII	350	1 dBm Tx Power
		470	10 dBm Tx Power
		870	23 dBm Tx Power
	LTE Band XX	300	1 dBm Tx Power
		390	10 dBm Tx Power
		720	23 dBm Tx Power

Table 5-12 Averaged DC power consumption of ME906E (GSM/GPRS/EDGE)

Description	Test Value (mA)	PCL	Notes/Configuration
	Typical		
GPRS850	300	5	1 Up/1 Down
	420		2 Up/1 Down
	600		4 Up/1 Down
	120	10	1 Up/1 Down
	160		2 Up/1 Down
	240		4 Up/1 Down
GPRS900	300	5	1 Up/1 Down
	430		2 Up/1 Down
	600		4 Up/1 Down
	130	10	1 Up/1 Down
	170		2 Up/1 Down
	240		4 Up/1 Down
GPRS1800	220	0	1 Up/1 Down
	250		2 Up/1 Down
	330		4 Up/1 Down
	120	10	1 Up/1 Down
	150		2 Up/1 Down
	200		4 Up/1 Down
GPRS1900	210	0	1 Up/1 Down
	270		2 Up/1 Down
	360		4 Up/1 Down
	120	10	1 Up/1 Down
	160		2 Up/1 Down
	210		4 Up/1 Down
EDGE850	200	8	1 Up/1 Down
	300		2 Up/1 Down
	360		4 Up/1 Down
	120	15	1 Up/1 Down
	170		2 Up/1 Down

Description	Test Value (mA)	PCL	Notes/Configuration
	Typical		
	240		4 Up/1 Down
EDGE900	200	8	1 Up/1 Down
	290		2 Up/1 Down
	360		4 Up/1 Down
	120	15	1 Up/1 Down
	170		2 Up/1 Down
	240		4 Up/1 Down
EDGE1800	160	2	1 Up/1 Down
	220		2 Up/1 Down
	270		4 Up/1 Down
	120	10	1 Up/1 Down
	140		2 Up/1 Down
	170		4 Up/1 Down
EDGE1900	160	2	1 Up/1 Down
	240		2 Up/1 Down
	290		4 Up/1 Down
	120	10	1 Up/1 Down
	140		2 Up/1 Down
	170		4 Up/1 Down

Table 5-13 Averaged Data Transmission DC power consumption of ME906J (WCDMA/HSDPA/LTE/CDMA/EVDO)

Description	Band	Test Value (mA)	Notes/Configuration
		Typical	
WCDMA	Band I	160	1 dBm Tx Power
		200	10 dBm Tx Power
		600	23.5 dBm Tx Power
	Band V	160	1 dBm Tx Power
		190	10 dBm Tx Power

Description	Band	Test Value (mA)	Notes/Configuration
		Typical	
		560	23.5 dBm Tx Power
	Band VI	160	1 dBm Tx Power
		190	10 dBm Tx Power
		560	23.5 dBm Tx Power
	Band XIX	160	1 dBm Tx Power
		190	10 dBm Tx Power
		560	23.5 dBm Tx Power
HSDPA	Band I	250	1 dBm Tx Power
		340	10 dBm Tx Power
		630	23.5 dBm Tx Power
	Band V	240	1 dBm Tx Power
		260	10 dBm Tx Power
		580	23.5 dBm Tx Power
	Band VI	240	1 dBm Tx Power
		260	10 dBm Tx Power
		580	23.5 dBm Tx Power
	Band XIX	240	1 dBm Tx Power
		260	10 dBm Tx Power
		580	23.5 dBm Tx Power
LTE	LTE Band I	280	1 dBm Tx Power
		350	10 dBm Tx Power
		670	23 dBm Tx Power
	LTE Band XI	280	1 dBm Tx Power
		340	10 dBm Tx Power
		680	23 dBm Tx Power
	LTE Band XVIII	270	1 dBm Tx Power
		330	10 dBm Tx Power
		680	23 dBm Tx Power

Description	Band	Test Value (mA)	Notes/Configuration
		Typical	
	LTE Band XIX	280	1 dBm Tx Power
		350	10 dBm Tx Power
		630	23 dBm Tx Power
	LTE Band XXI	290	1 dBm Tx Power
		350	10 dBm Tx Power
		730	23 dBm Tx Power
CDMA	BC0	170	1 dBm Tx Power
		210	10 dBm Tx Power
		650	24 dBm Tx Power
	BC6	170	1 dBm Tx Power
		220	10 dBm Tx Power
		520	21 dBm Tx Power
EVDO	BC0	190	1 dBm Tx Power
		230	10 dBm Tx Power
		650	24 dBm Tx Power
	BC6	190	1 dBm Tx Power
		240	10 dBm Tx Power
		520	21 dBm Tx Power

NOTE

All power consumption test configuration can be referenced by GSM Association Official Document TS.09: Battery Life Measurement and Current Consumption Technique.

- LTE test condition: 10/20 MHz bandwidth, QPSK, 1 RB when testing max. Tx power and full RB when testing 0 dBm or 10 dBm;
- Test condition: for max. Tx. power, see 4.4.2 Conducted Transmit Power, which are listed in Table 4-8 to Table 4-10 ; for max. data throughput, see 2.2 Function Overview, which are listed in Table 2-1 Features.

Table 5-14 Averaged GPS operation DC power consumption of ME906

Description	Test Value (mA)	Notes/Configuration
	Typical	
GPS fixing	100	RF is disabled; USB is in active; The Rx power of GPS is –130 dBm.
GPS tracking	100	

5.6 Reliability Features

Table 5-15 lists the test conditions and results of the reliability of the ME906 module.

Table 5-15 Test conditions and results of the reliability of the ME906 module

Item		Test Condition	Standard	Sample size	Results
Stress	Low-temperature storage	• Temperature: –40ºC • Operation mode: no power, no package • Test duration: 24 h	JESD22-A119-C	3 pcs/group	Visual inspection: ok Function test: ok RF specification: ok
	High-temperature storage	• Temperature: 85ºC • Operation mode: no power, no package • Test duration: 24 h	JESD22-A103-C	3 pcs/group	Visual inspection: ok Function test: ok RF specification: ok
	Low-temperature operating	• Temperature: –20ºC • Operation mode: working with service connected • Test duration: 24 h	IEC60068-2-1	3 pcs/group	Visual inspection: ok Function test: ok RF specification: ok
	High-temperature operating	• Temperature: 70ºC • Operation mode: working with service connected • Test duration: 24 h	JESD22-A108-C	3 pcs/group	Visual inspection: ok Function test: ok RF specification: ok
	Damp heat cycling	• High temperature: 55ºC • Low temperature: 25ºC • Humidity: 95%±3% • Operation mode: working with service connected • Test duration: 6 cycles; 12 h+12 h/cycle	JESD22-A101-B	3 pcs/group	Visual inspection: ok Function test: ok RF specification: ok

Item		Test Condition	Standard	Sample size	Results
	Thermal shock	• Low temperature: –40º • High temperature: 85ºC • Temperature change interval: < 20s • Operation mode: no power • Test duration: 100 cycles; 15 min+15 min/cycle	JESD22-A106-B	3 pcs/group	Visual inspection: ok Function test: ok RF specification: ok
	Salty fog test	• Temperature: 35°C • Density of the NaCl solution: 5%±1% • Operation mode: no power, no package • Test duration: Spraying interval: 8 h Exposing period after removing the salty fog environment: 16 h	JESD22-A107-B	3 pcs/group	Visual inspection: ok Function test: ok RF specification: ok
	Sine vibration	• Frequency range: 5 Hz to 200 Hz • Acceleration: 1 Grms • Frequency scan rate: 0.5 oct/min • Operation mode: working with service connected • Test duration: 3 axial directions. 2 h for each axial direction. • Operation mode: working with service connected	JESD22-B103-B	3 pcs/group	Visual inspection: ok Function test: ok RF specification: ok
	Shock test	• Half-sine wave shock • Peak acceleration: 30 Grms • Shock duration: 11 ms • Operation mode: working with service connected • Test duration: 6 axial directions. 3 shocks for each axial direction. • Operation mode: working with service connected	JESD-B104-C	3 pcs/group	Visual inspection: ok Function test: ok RF specification: ok

Item		Test Condition	Standard	Sample size	Results
	Drop test	• 0.8 m in height. Drop the module on the marble terrace with one surface facing downwards, six surfaces should be tested. • Operation mode: no power, no package	IEC60068-2-32	3 pcs/group	Visual inspection: ok Function test: ok RF specification: ok
Life	High temperature operating life	• Temperature: 70ºC • Operation mode: working with service connected • Test duration: 168 h, 336 h, 500 h, 1000 h for inspection point	JESD22-A108-B	50 pcs/group	Visual inspection: ok Function test: ok RF specification: ok
	High temperature & high humidity	• High temperature: 85ºC • Humidity: 85% • Operation mode: powered on and no working • Test duration: 168 h, 336 h, 500 h, 1000 h for inspection point	JESD22-A110-B	50 pcs/group	Visual inspection: ok Function test: ok RF specification: ok Cross section: ok
	Temperature cycle	• High temperature: 85ºC • Low temperature: –40ºC • Temperature change slope: 6ºC/min • Operation mode: no power • Test duration: 168 h, 336 h, 500 h, 1000 h for inspection point	JESD22-A104-C	50 pcs/group	Visual inspection: ok Function test: ok RF specification: ok Cross section: ok
ESD	HBM (Human Body Model)	• 1 kV (Class 1 B) • Operation mode: no power	JESD22-A114-D	3 pcs/group	Visual inspection: ok Function test: ok RF specification: ok
	ESD with DVK (or embedded in the host)	• Contact Voltage: ±2 kV, ±4 kV • Air Voltage : ±2 kV, ±4 kV, ±8 kV • Operation mode: working with service connected	IEC61000-4-2	2 pcs	Visual inspection: ok Function test: ok RF specification: ok
NOTE Groups ≥ 2					

5.7 EMC and ESD Features

The following are the EMC design comments:

- Attention should be paid to static control in the manufacture, assembly, packaging, handling, and storage process to reduce electrostatic damage to HUAWEI module.
- RSE (Radiated Spurious Emission) may exceed the limit defined by EN301489 if the antenna port is protected by TVS (Transient Voltage Suppressor), which is resolved by making some adjustments on RF match circuit.
- TVS should be added on the USB port for ESD protection, and the parasitic capacitance of TVS on D+/D- signal should be less than 2 pF. Common-mode inductor should be added in parallel on D+/D- signal.
- TVS should be added on the SIM interface for ESD protection. The parasitic capacitance of TVS on SIM signal should be less than 10 pF.
- Resistors in parallel and a 10 nF capacitor should be added on RESET# and Power_On_Off signal to avoid shaking, and the distance between the capacitor and the related pin should be less than 100 mil.
- PCB routing should be V-type rather than T-type for TVS.
- An integrated ground plane is necessary for EMC design.

The following are the requirements of ESD environment control:

- The electrostatic discharge protected area (EPA) must have an ESD floor whose surface resistance and system resistance are greater than 1×10^4 Ω while less than 1×10^9 Ω.
- The EPA must have a sound ground system without loose ground wires, and the ground resistance must be less than 4 Ω.
- The workbench for handling ESD sensitive components must be equipped with common ground points, the wrist strap jack, and ESD pad. The resistance between the jack and common ground point must be less than 4 Ω. The surface resistance and system resistance of the ESD pad must be less than 1×10^9 Ω.
- The EPA must use the ESD two-circuit wrist strap, and the wrist strap must be connected to the dedicated jack. The crocodile clip must not be connected to the ground.
- The ESD sensitive components, the processing equipment, test equipment, tools, and devices must be connected to the ground properly. The indexes are as follows:
  - Hard ground resistance < 4 Ω
  - 1×10^5 Ω ≤ Soft ground resistance < 1×10^9 Ω
  - 1×10^5 Ω ≤ ICT fixture soft ground resistance < 1×10^{11} Ω
  - The electronic screwdriver and electronic soldering iron can be easily oxidized. Their ground resistance must be less than 20 Ω.
- The parts of the equipment, devices, and tools that touch the ESD sensitive components and moving parts that are close to the ESD sensitive components must be made of ESD materials and have sound ground connection. The parts that are not made of ESD materials must be handled with ESD treatment, such as painting the ESD coating or ionization treatment (check that the friction voltage is less than 100 V).

- Key parts in the production equipment (parts that touch the ESD sensitive components or parts that are within 30 cm away from the ESD sensitive components), including the conveyor belt, conveyor chain, guide wheel, and SMT nozzle, must all be made of ESD materials and be connected to the ground properly (check that the friction voltage is less than 100 V).
- Engineers that touch IC chips, boards, modules, and other ESD sensitive components and assemblies must wear ESD wrist straps, ESD gloves, or ESD finger cots properly. Engineers that sit when handling the components must all wear ESD wrist straps.
- Noticeable ESD warning signs must be attached to the packages and placement areas of ESD sensitive components and assemblies.
- Boards and IC chips must not be stacked randomly or be placed with other ESD components.
- Effective shielding measures must be taken on the ESD sensitive materials that are transported or stored outside the EPA.

NOTE

HUAWEI ME906 series module does not include any protection against overvoltage.

6 Mechanical Specifications

6.1 About This Chapter

This chapter describes the following aspects of the ME906 module:

- Dimensions of ME906
- Label
- Packing System

6.2 Dimensions of ME906

Figure 6-1 shows the dimensions of ME906 in details.

Figure 6-1 Dimensions of ME906

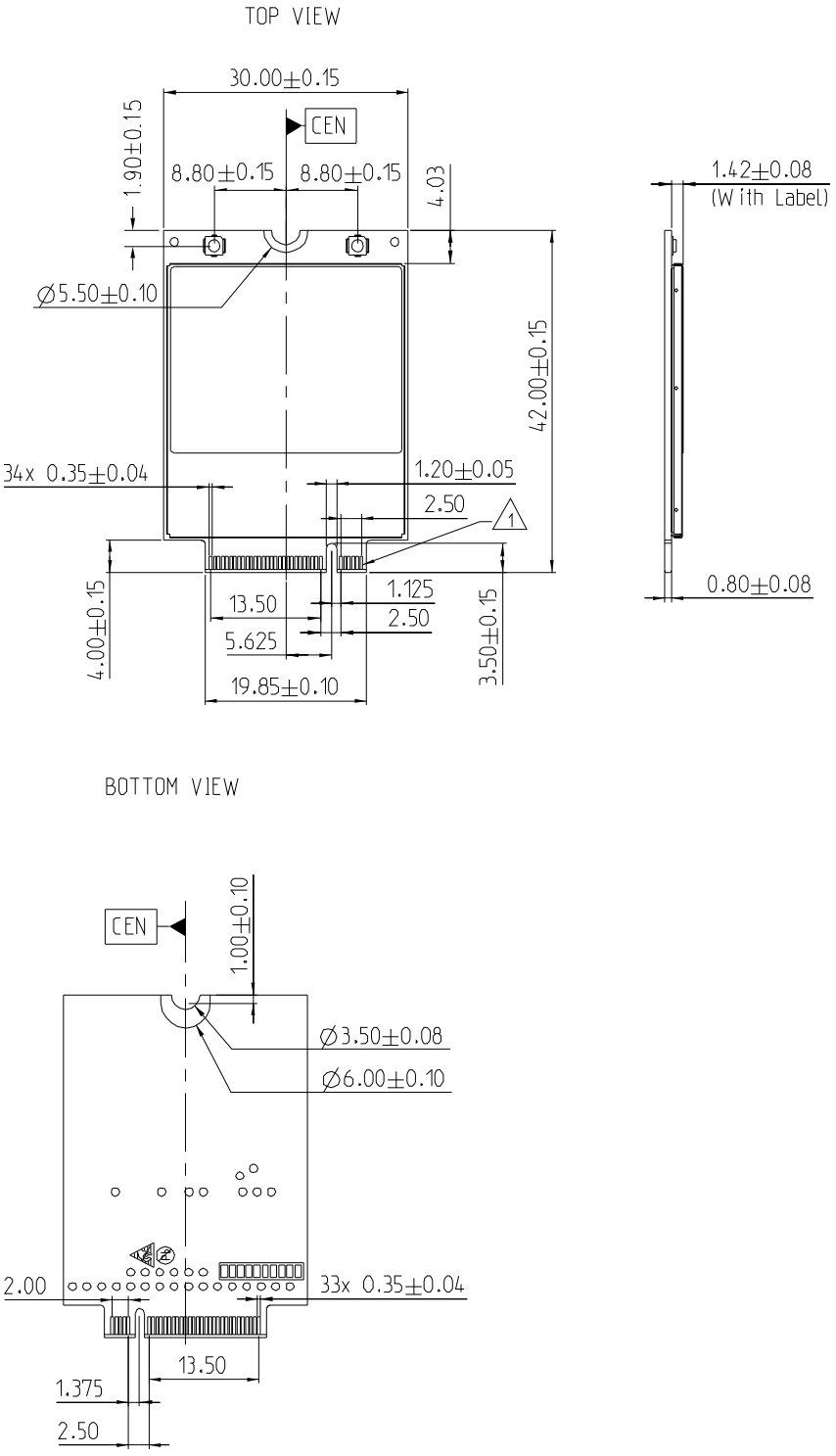

6.3 Label

Figure 6-2 shows the dimensions of ME906 label.

Figure 6-2 Dimensions of label

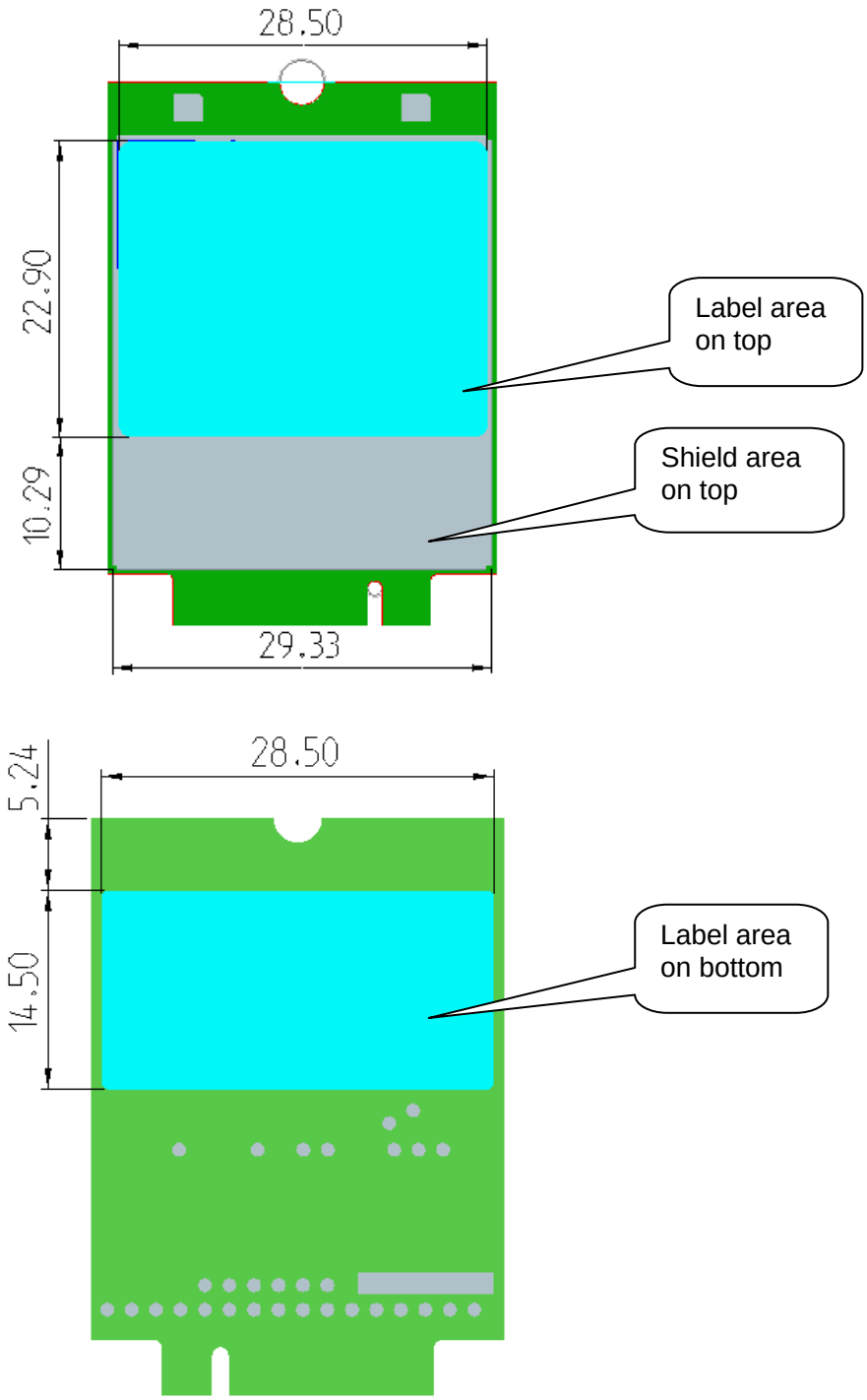

6.4 Packing System

ME906 package includes the blister tray, the blister tray cover, and the carton (with bottom and top clapboard).

The blister tray of the ME906 module package is as shown in the following figure. There are 75 pcs modules for every tray, 6 pcs trays in one carton, and 450 pcs modules for every carton. And the blister tray cover covers the top tray.

Figure 6-3 Package assembly

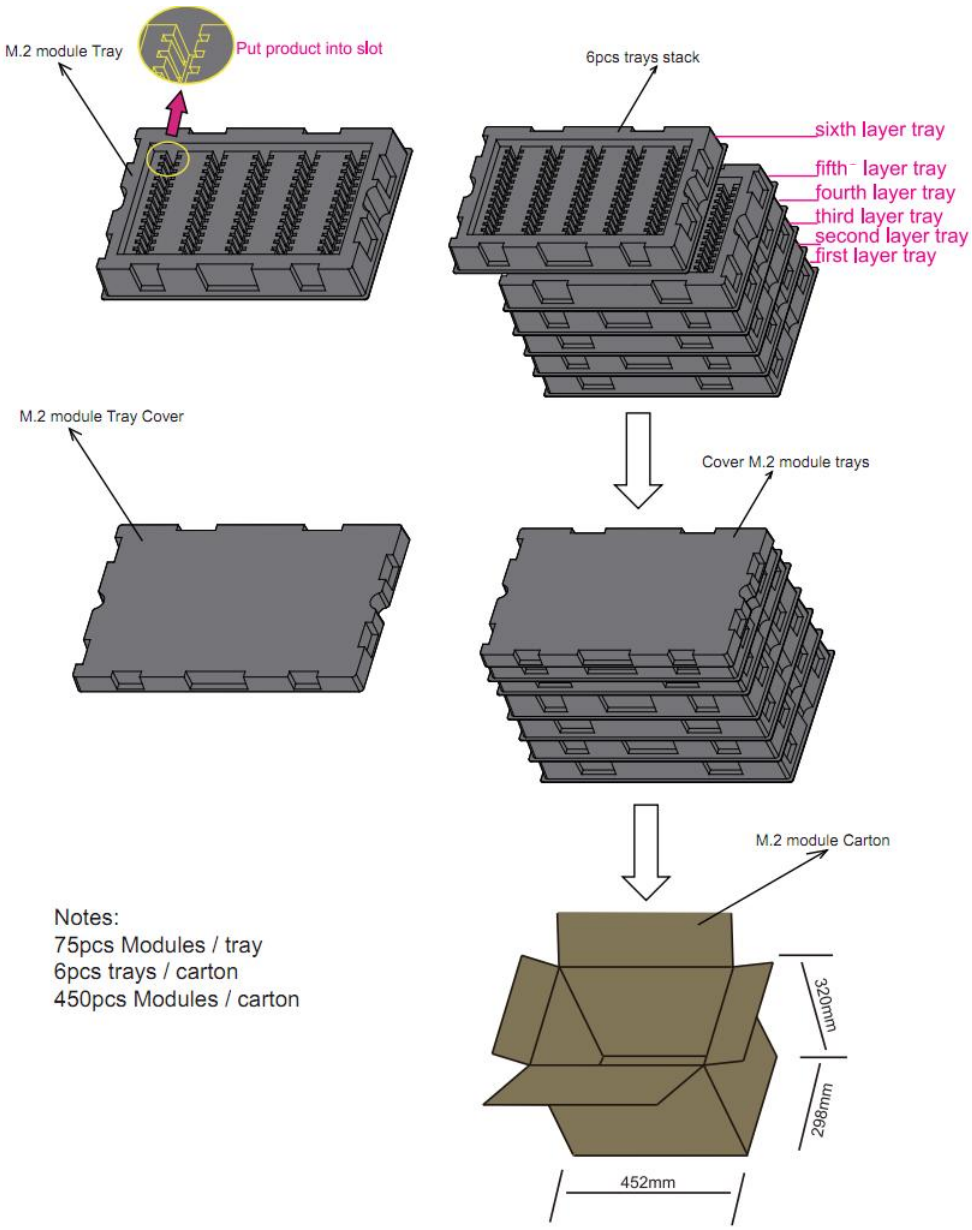

7 Installation

7.1 About This Chapter

This chapter describes the assembly of ME906, including:

- Connect ME906 to board
- Antenna Plug

7.2 Connect ME906 to board

Figure 7-1 Install ME906

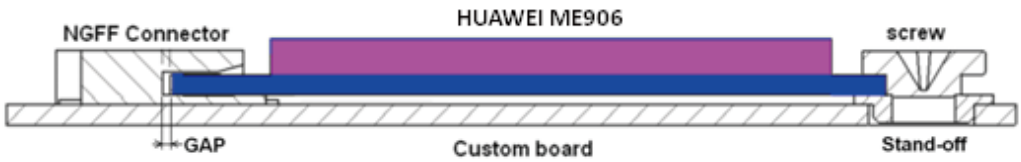

It refers to M.2 specification.

The module will need a mechanical retention at the end of the board. The module specifies a 5.5 mm Dia. keep out zone at the end for attaching a screw.

The module Stand-off and mounting screw also serve as part of the module Electrical Ground path. The Stand-off should be connected directly to the ground plane on the platform. So that when the module is mounted and the mounting screw is screwed on to hold the module in place, this will make the electrical ground connection from the module to the platform ground plane.

7.3 Thermal Management

Because ME906 is very small, the dissipating heat is very important to it.

It has to take several means to ensure ME906 to meet the specification.

The methods described as follow:

- The mounting screw is to hold the module in place, and connect the heat source to the platform ground plane of the custom board.
- About the custom board, it can afford larger and much more area of grounding layers to enhance cooling of the PCB and ensure that the heat spreads evenly in the PCB.
- The stand-off provides a thermal ground path. The design requirements for thermal are a material with a minimum conductivity of 50 watts per meter Kelvin and surface area of 22 Sq mm.
- The customer can add a heat sink on the model top surface, and this method can bring out much heat source of the module.

7.4 Antenna Plug

Figure 7-2 Mating the plug

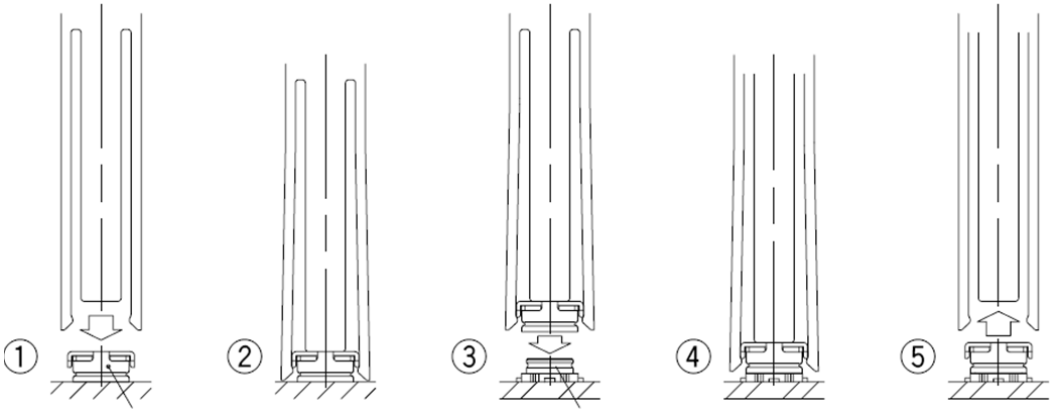

1. Align the mating tool or the mating end of the tool over the plug end of the cable assembly.
2. Firmly place the tool over the plug until it is secured in the tool.
3. Place the plug cable assembly (held in the tool) over the corresponding receptacle.
4. Assure that the plug and receptacle are aligned press-down perpendicular to the mounting surface until both connectors are fully mated.
5. Remove the mating tool by pulling it up carefully.

Figure 7-3 Unmating the plug

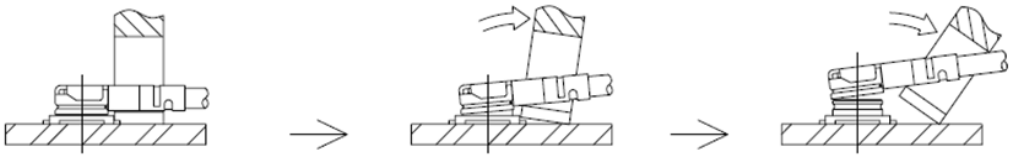

NOTE

- The extraction tool is recommended.
- Any attempt of unmating by pulling on the cable may result in damage and influence the mechanical / electrical performance.

It is recommended not to apply any pull forces after the bending of the cable, as described in Figure 7-4 .

Figure 7-4 Do not apply any pull forces after the bending of the cable

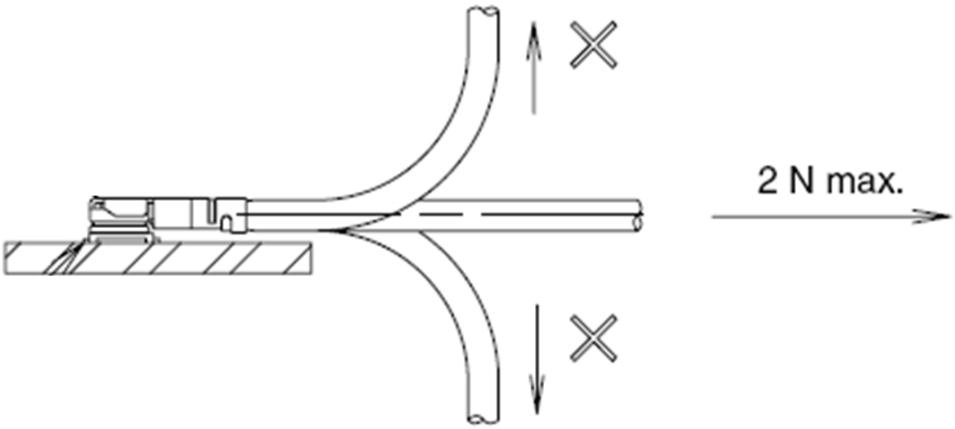

8 Certifications

8.1 About This Chapter

This chapter gives a general description of certifications of ME906.

8.2 Certifications

NOTE

The certification of ME906 is testing now. Table 8-1 shows certifications the ME906 will be implemented. For more demands, please contact us for more details about this information.

Table 8-1 Product certifications

Certification	Model Name		
	ME906V	ME906E	ME906J
CE	-	√	-
FCC	√	√	-
CCC	-	-	-
NCC	√	√	√
A-TICK	-	√	-
Jate & Telec	-	-	√
IC	-	-	-
EU RoHS	√	√	√
JGPSSI	-	-	√
SGS RoHS	-	-	-

Certification	Model Name		
	ME906V	ME906E	ME906J
PVC-Free	√	√	√
GCF	-	√	-
PTCRB	√	-	-
Halogen-free	√	√	√
CCF(CTIA/CDG)	-	-	-

9 Safety Information

Read the safety information carefully to ensure the correct and safe use of your wireless device. Applicable safety information must be observed.

9.1 Interference

Power off your wireless device if using the device is prohibited. Do not use the wireless device when it causes danger or interference with electric devices.

9.2 Medical Device

- Power off your wireless device and follow the rules and regulations set forth by the hospitals and health care facilities.
- Some wireless devices may affect the performance of the hearing aids. For any such problems, consult your service provider.
- Pacemaker manufacturers recommend that a minimum distance of 15 cm be maintained between the wireless device and a pacemaker to prevent potential interference with the pacemaker. If you are using an electronic medical device, consult the doctor or device manufacturer to confirm whether the radio wave affects the operation of this device.

9.3 Area with Inflammables and Explosives

To prevent explosions and fires in areas that are stored with inflammable and explosive devices, power off your wireless device and observe the rules. Areas stored with inflammables and explosives include but are not limited to the following:

- Gas station
- Fuel depot (such as the bunk below the deck of a ship)
- Container/Vehicle for storing or transporting fuels or chemical products
- Area where the air contains chemical substances and particles (such as granule, dust, or metal powder)
- Area indicated with the "Explosives" sign

- Area indicated with the "Power off bi-direction wireless equipment" sign
- Area where you are generally suggested to stop the engine of a vehicle

9.4 Traffic Security

- Observe local laws and regulations while using the wireless device. To prevent accidents, do not use your wireless device while driving.
- RF signals may affect electronic systems of motor vehicles. For more information, consult the vehicle manufacturer.
- In a motor vehicle, do not place the wireless device over the air bag or in the air bag deployment area. Otherwise, the wireless device may hurt you owing to the strong force when the air bag inflates.

9.5 Airline Security

Observe the rules and regulations of airline companies. When boarding or approaching a plane, power off your wireless device. Otherwise, the radio signal of the wireless device may interfere with the plane control signals.

9.6 Safety of Children

Do not allow children to use the wireless device without guidance. Small and sharp components of the wireless device may cause danger to children or cause suffocation if children swallow the components.

9.7 Environment Protection

Observe the local regulations regarding the disposal of your packaging materials, used wireless device and accessories, and promote their recycling.

9.8 WEEE Approval

The wireless device is in compliance with the essential requirements and other relevant provisions of the Waste Electrical and Electronic Equipment Directive 2012/19/EU (WEEE Directive).

9.9 RoHS Approval

The wireless device is in compliance with the restriction of the use of certain hazardous substances in electrical and electronic equipment Directive 2011/65/EU (RoHS Directive).

9.10 Laws and Regulations Observance

Observe laws and regulations when using your wireless device. Respect the privacy and legal rights of the others.

9.11 Care and Maintenance

It is normal that your wireless device gets hot when you use or charge it. Before you clean or maintain the wireless device, stop all applications and power off the wireless device.

- Use your wireless device and accessories with care and in clean environment. Keep the wireless device from a fire or a lit cigarette.
- Protect your wireless device and accessories from water and vapour and keep them dry.
- Do not drop, throw or bend your wireless device.
- Clean your wireless device with a piece of damp and soft antistatic cloth. Do not use any chemical agents (such as alcohol and benzene), chemical detergent, or powder to clean it.
- Do not leave your wireless device and accessories in a place with a considerably low or high temperature.
- Use only accessories of the wireless device approved by the manufacture. Contact the authorized service center for any abnormity of the wireless device or accessories.
- Do not dismantle the wireless device or accessories. Otherwise, the wireless device and accessories are not covered by the warranty.
- The device should be installed and operated with a minimum distance of 20 cm between the radiator and your body.

9.12 Emergency Call

This wireless device functions through receiving and transmitting radio signals. Therefore, the connection cannot be guaranteed in all conditions. In an emergency, you should not rely solely on the wireless device for essential communications.

9.13 Regulatory Information

The following approvals and notices apply in specific regions as noted.

9.13.1 CE Approval (European Union)

The wireless device is approved to be used in the member states of the EU. The wireless device is in compliance with the essential requirements and other relevant provisions of the Radio and Telecommunications Terminal Equipment Directive 1999/5/EC (R&TTE Directive).

9.13.2 FCC Statement

Federal Communications Commission Notice (United States): Before a wireless device model is available for sale to the public, it must be tested and certified to the FCC that it does not exceed the limit established by the government-adopted requirement for safe exposure.

This device complies with Part 15 of the FCC Rules. Operation is subject to the following two conditions: (1) this device may not cause harmful interference, and (2) this device must accept any interference received, including interference that may cause undesired operation.

Warning: Changes or modifications made to this equipment not expressly approved by HUAWEI may void the FCC authorization to operate this equipment.

10 Appendix A Circuit of Typical Interface

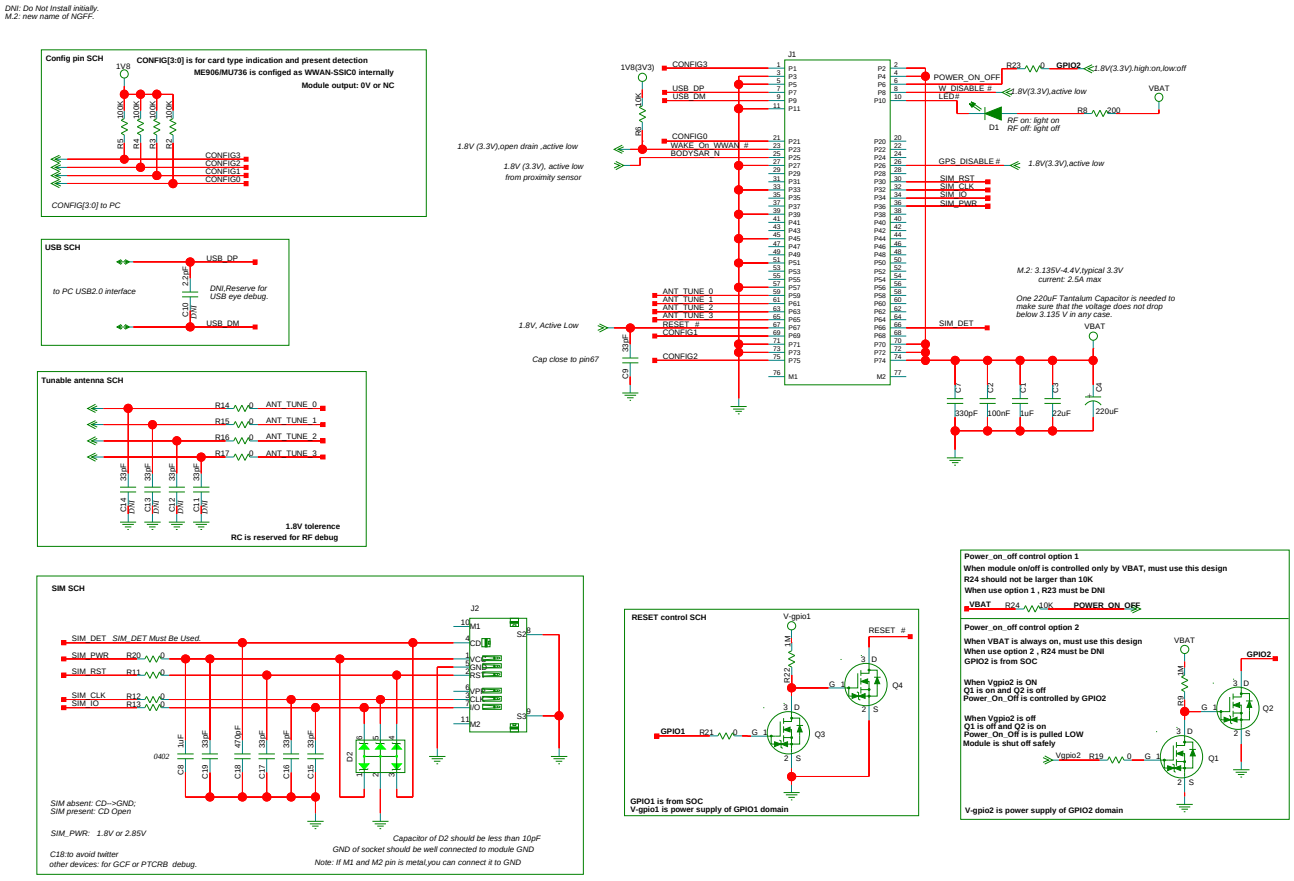

11 Appendix B Acronyms and Abbreviations

Acronym or Abbreviation	Expansion
CCC	China Compulsory Certification
CS	Coding Scheme
CSD	Circuit Switched Data
DC	Direct Current
DMA	Direct Memory Access
DVK	Development Kit
EBU	External Bus Unit
EDGE	Enhanced Data for GSM Evolution
EIA	Electronic Industries Association
EMC	Electromagnetic Compatibility
EPA	Electrostatic Discharge Protected Area
ESD	Electrostatic Discharge
EU	European Union
FCC	Federal Communications Commission
FDD-TDMA	Frequency Division Duplexing-Time Division Multiple Access
GMSK	Gaussian Minimum Shift Keying
GPIO	General-purpose I/O
GPRS	General Packet Radio Service
GSM	Global System for Mobile communication
HBM	Human Body Model

Acronym or Abbreviation	Expansion
HSIC	High Speed Inter-Chip Interface
HSDPA	High-Speed Downlink Packet Access
HSPA+	Enhanced High Speed Packet Access
HSUPA	High Speed Up-link Packet Access
IPC	Inter Processor Communications
ISO	International Standards Organization
I2S	I2C Sound
LCP	Liquid Crystal Polyester
LDO	Low-Dropout
LED	Light-Emitting Diode
LTE	Long Term Evolution
MCP	Multi-chip Package
MIPI	Mobile Industry Processor Interface
NGFF	Next Generation Form Factor
NTC	Negative Temperature Coefficient
PA	Power Amplifier
PBCCH	Packet Broadcast Control Channel
PCB	Printed Circuit Board
PDU	Protocol Data Unit
PMU	Power Management Unit
RF	Radio Frequency
RoHS	Restriction of the Use of Certain Hazardous Substances
RSE	Radiated Spurious Emission
RTC	Real-time Clock
SIMO	Single Input Multiple Output
TTL	Transistor-transistor Logic
TVS	Transient Voltage Suppressor
UMTS	Universal Mobile Telecommunications System
USB	Universal Serial Bus
USIM	Universal Subscriber Identity Module

Acronym or Abbreviation	Expansion
VSWR	Voltage Standing Wave Ratio
WCDMA	Wideband Code Division Multiple Access